SURFACE PROTECTION	
I	JED 240-5
II	JED 256-5
III	PLASTIC / RUBBER

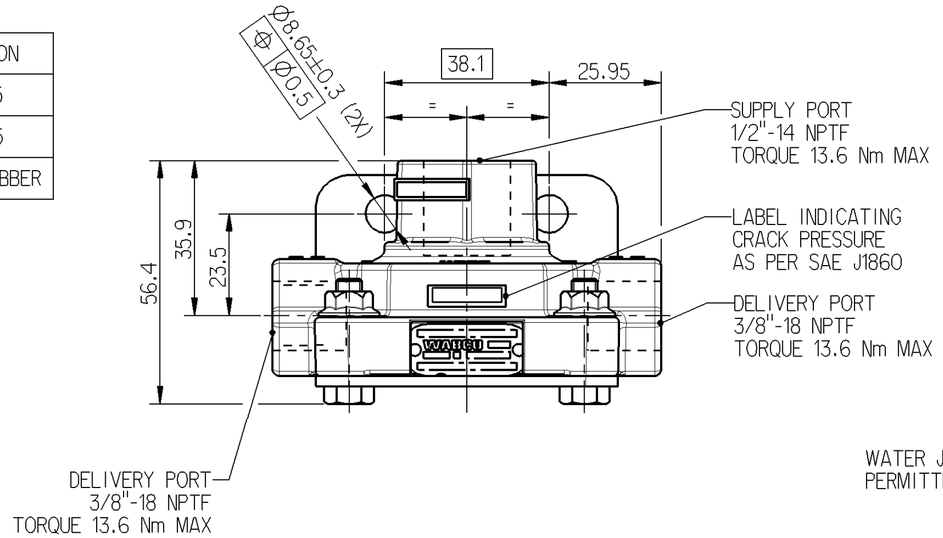

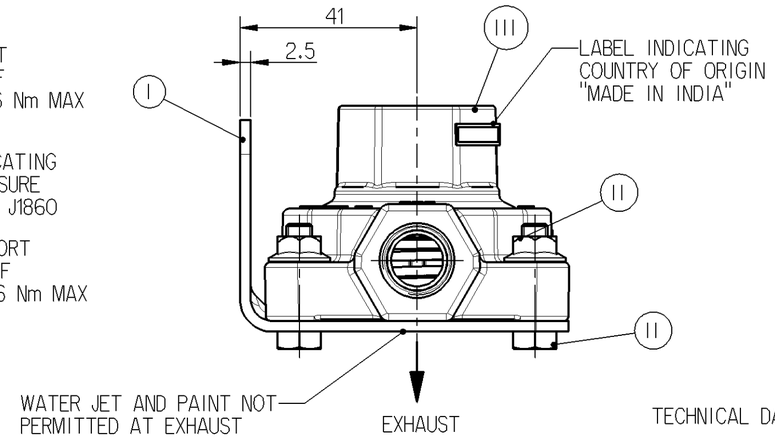

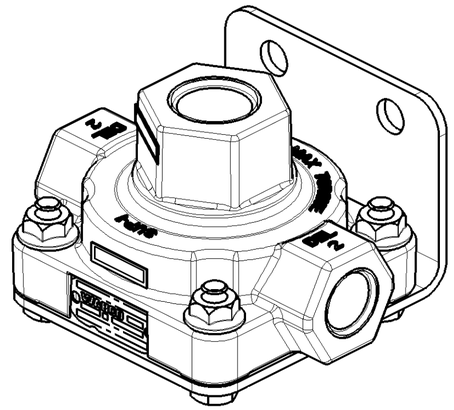

TECHNICAL DATA:

WORKING MEDIUM : AIR

NORMAL WORKING PRESSURE: 9.4 bar (135 psi)

MAXIMUM WORKING PRESSURE: 11 bar (160 psi)

THERMAL RANGE OF OPERATION: -40°F TO +94°C (-40°F TO +200°F)

ROOM TEMPERATURE LEAKAGE NOT TO EXCEED 30 SCCM

CRACK PRESSURE: 0.414 ±0.103 bar (6±1.5 psi)

PART TO BE IDENTIFIED BY CRACK PRESSURE, PART NUMBER, DATE OF MANUFACTURE AND COUNTRY OF ORIGIN LABEL

INSTALLATION : REFER FIGURE U

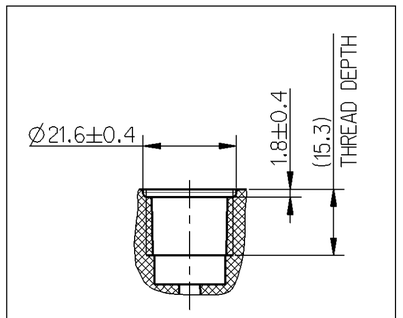

DETAILS OF SUPPLY PORT
1/2"-14 NPTF

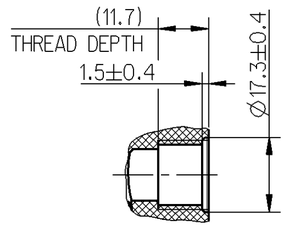

DETAILS OF DELIVERY PORT
3/8"-18 NPTF

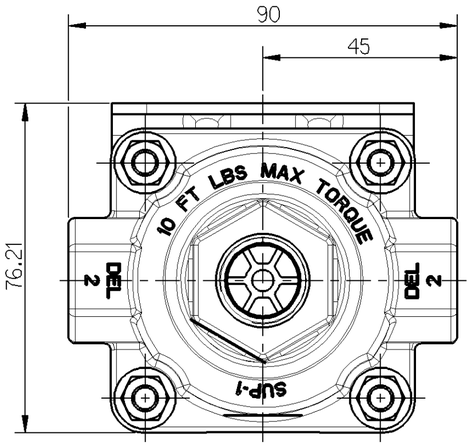

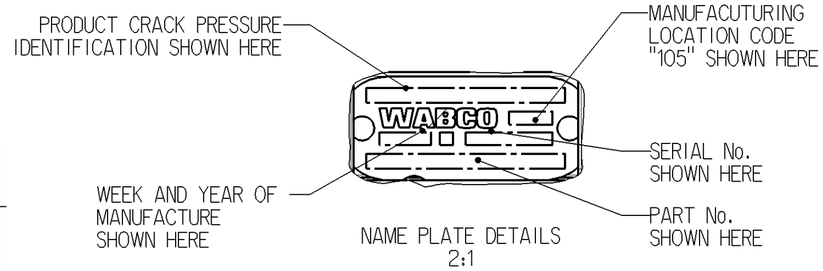

NAME PLATE DETAILS
2:1

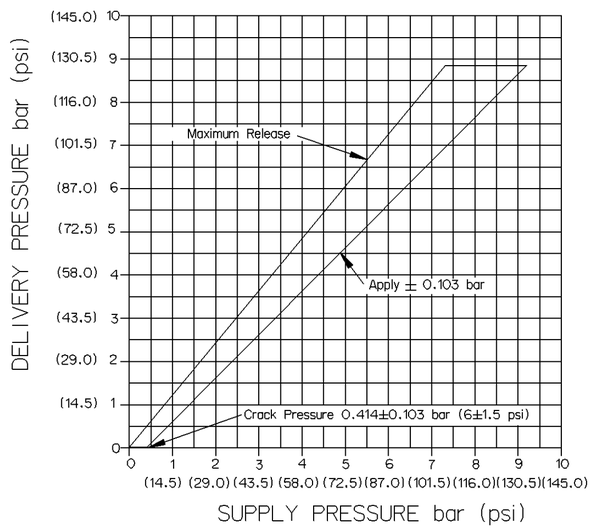

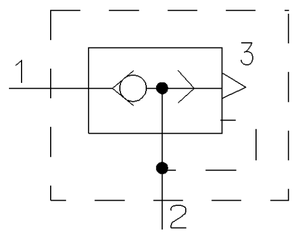

1 - SUPPLY PORT

2 - DELIVERY PORT

3 - EXHAUST PORT

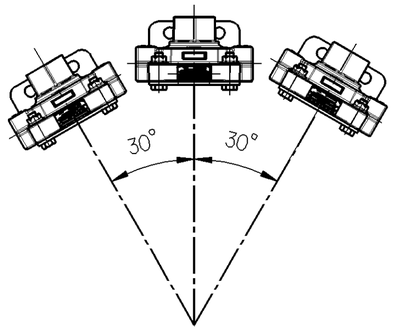

PERMISSIBLE INSTALLATION POSITION
FIGURE U

General Specification: JED-334-0						
Further Technical Data: 973 899 000 0						
Doc. Code: 035		Sheet: 1 To 9				
General Tolerances JED-261						
Class 1)		Range of Nominal Dimensions (± mm) ≤ 50	> 50 ≤ 180	> 180 ≤ 400	> 400	∡
Fine		0.5	1.0	1.5	2.0	
Medium	X	1.0	2.0	3.0	4.0	±3°
Coarse		2.0	3.5	5.0	6.5	
Tapped Holes acc. JED-686						
1) Tolerance Class Applied Crossmarked						

Copyright WABCO®

Date	Signature
Drawn 2012-08-03	Kothandapani
Checked 2012-08-04	Arumugham
Expert A GANESAMOORTHY	

WABCO

QRP-QUICK RELEASE PLASTIC

Mass	Scale	Material No.	Date of first issue: 2012-08-03		
0.366 KG	1:1 2:1	973 899 042 0	Doc.Code 005	Language EN	Sheet 1/1
Size A 2	CAD System Pro/E	ECN-No. -	Revision -	Techn. Resp. 5310_WIN	Replacement for /

100mm

Toute Communication ou reproduction de ce document, toute exploitation ou communication de son contenu sont interdites, sauf autorisation expresse. Tous droits de propriété industrielle réservés, notamment en matière de brevets et de modèles.

Weitergabe sowie Vervielfältigung dieser Unterlage, Verwertung und Mitteilung ihres Inhalts nicht gestattet, soweit nicht ausdrücklich zugestanden. Zuwiderhandlungen stellen einen strafrechtlichen Missbrauch dar und verpflichten zu Schadensersatz. Alle Rechte für den Fall der Patenterteilung oder Gebrauchsmustereintragung vorbehalten.

Non è permesso consegnare a terzi o riprodurre questo documento, né utilizzarne il contenuto o renderlo comunque noto a terzi senza autorizzazione esplicita. Ogni infrazione costituisce un evidente abuso e comporterà il risarcimento dei danni subiti. Ci riserviamo tutti i diritti derivanti da brevetti o modelli.

No utilizar o dar a terceros este documento ni utilizar su contenido o hacerlo de cualquier otra forma sin nuestra expresa autorización. Quien lo hiciere incurrirá en responsabilidad y deberá indemnizar los daños y perjuicios. Nos reservamos todos los derechos de propiedad industrial.

Copying of this document and giving it to others and the use or communication of the contents thereof, are forbidden without express authority. Offenders are liable to the payment of damages. All rights are reserved in the event of the grant of a patent or the registration of a utility model or design. This document is the subject of copyright.