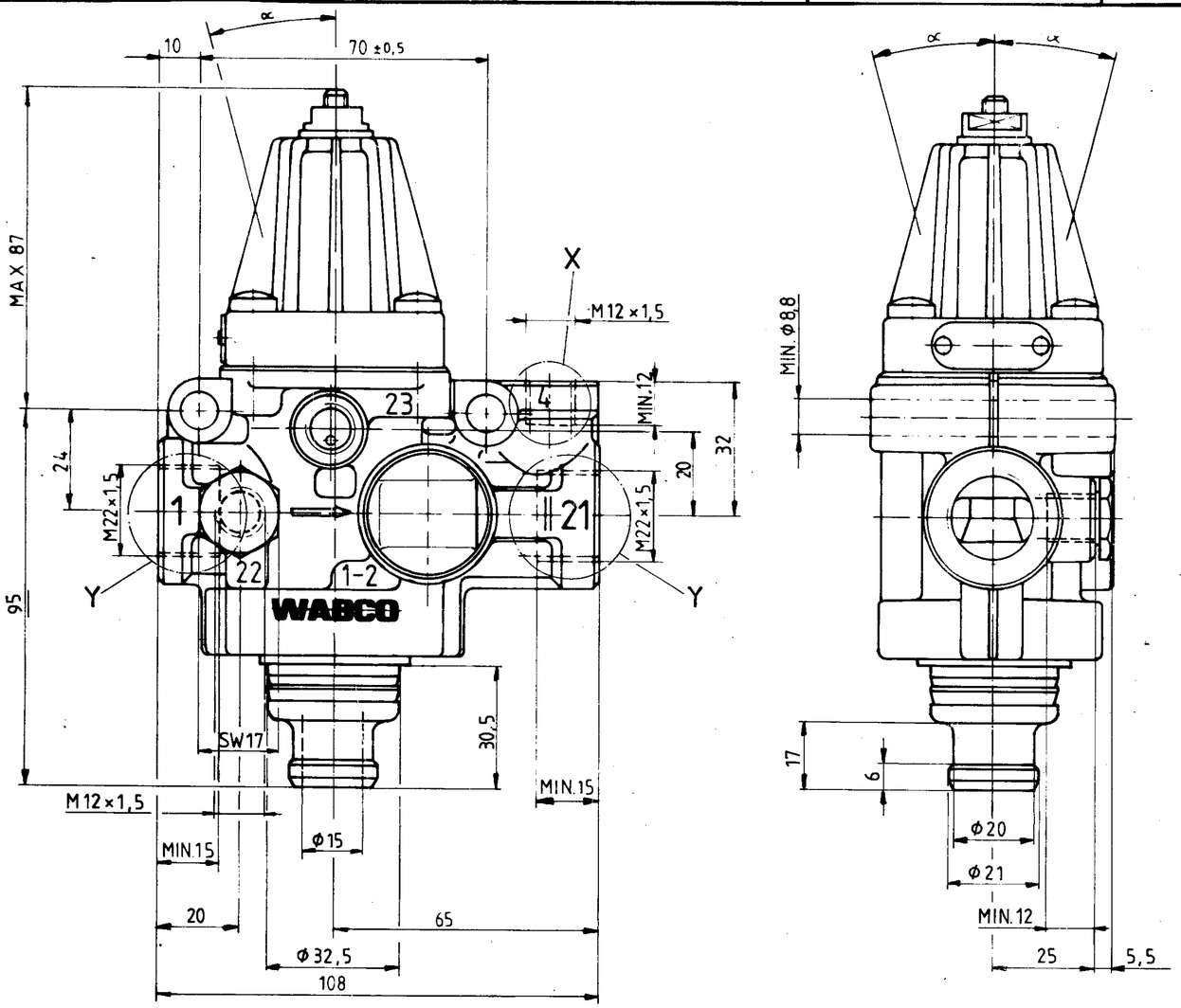

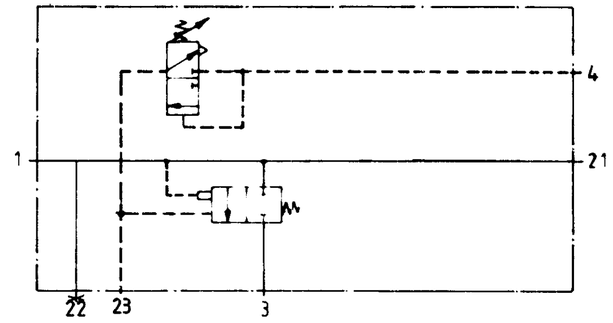

1 = INLET
EINGANG
ALIMENTATION
ALIMENTAZIONE

21 = OUTLET
AUSGANG
SORTIE
USCITA

22 = AUXILIARY SUPPLY
NEBENVERBRAUCHER
JONCTION AUXILIEIRE
ORIFICIO ACCESSORIO

23 = OUTLET (FOR CONTROL IMPULSE) MAX VOLUMEN OF AIR = 0,06 l
AUSGANG (FUER STEUERIMPULS) MAX ZU BELUEFTENDES VOLUMEN V_{MAX} = 0,06 l
SORTIE
USCITA

4 = CONTROL PORT
STEUERANSCHLUSS
ORIFICE DE COMMANDE
ORIFIZZIO DI COMANDO

3 = EXHAUST FOR COMPRESSOR IDLING
ENTLUEFTUNG BEI LEERLAUF
ECHAPPEMENT POUR MARCHE A VIDE DU COMPRESSEUR
SCARICO PER MARCIA A FOLLE DEL COMPRESSORE

INSTALLATION POSITION
EINBAULAGE
POSITION D'INSTALLATION
POSIZIONE DI MONTAGGIO

$\alpha = 0°$ 15°

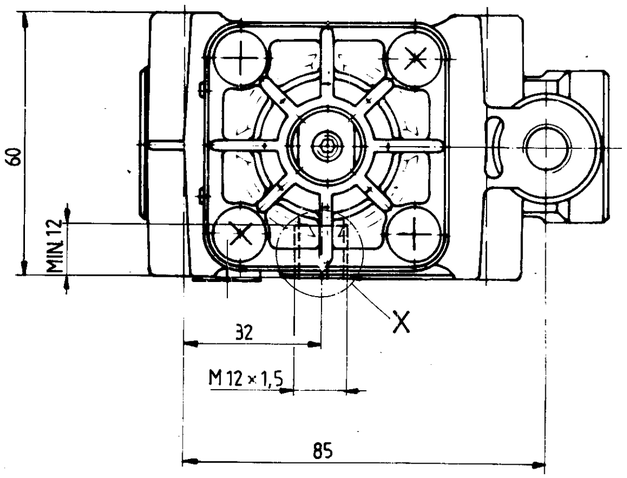

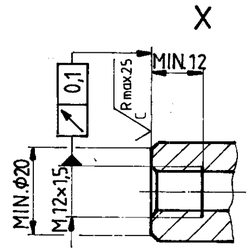

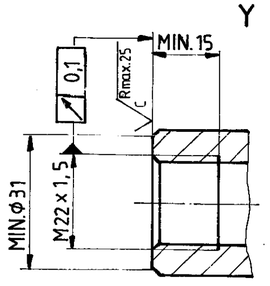

FURTHER TECHNICAL DATA SEE						
IDENTIFICATION No	975 303 463 0					
CODE FOR DOCUMENT	605	SHEET	2 TO 2			
GENERAL TOLERANCES						
CLASS	RANGE OF NOMINAL DIMENSIONS (± mm)					
	1)	≤ 50	> 50 ≤ 180	> 180 ≤ 400	> 400	
I	X	0,5	1	1,5	2	
II		1	2	3	4	± 3°
III		2	3,5	5	6,5	
TAPPED HOLES ACC ISO 4039						
1) TOLERANCE CLASS APPLIED CROSSMARKED						

DCN-No	REV	DATE
	L	
	K	
	J	
	H	
	G	
	F	
	E	
	D	
	C	
	B	
	A	

COPYRIGHT	
DATE	SIGNATURE
DRAWN 87-04-02	Brink, Keuze
CHECKED 87-04-02	[signature]
STANDARDIZATION 87-04-08	[signature]

WABCO CLAYTON DEWANDRE

COMBINED UNLOADER
DRUCKREGLER
REGULATEUR DE PRESSION
GRUPPO DI REGOLAZIONE

MASS	SCALE	PRODUCT IDENTIFICATION NO.	CODE FOR DOCUMENT	SHEET
0,65 kg	1:1	975 303 071 0	605	1/1
SIZE	TRI	CODE F PROD. GROUP	CODE FOR SHAPE	REPLACEMENT FOR
A 2	140	502		

100 mm