PART No.
M200810 GA

DO NOT SCALE IF IN DOUBT ASK

ENGINEERING CHANGES			
ECN No.	DATE	REV	SIGN
10538	27.12.06	NEW	VPK
10652	16.03.07	1	VPK
DIM 38 min. was 30 min. (Part No. 970 051 464 0 was 884 011 278 0).			
11365	21.01.09	2	AJAY
Note regarding "This drawing is released for CKD assembly" deleted and "This drawing is released for localized assembly" added. Drawing redrawn.			
11515	02.07.09	3	AJAY
Note "Customer part No. shown here" added. Drawing redrawn.			
12083	16.03.11	4	RBS
Drawing template WABCO was WABCO-TVS (INDIA) Ltd. Drawing redrawn.			

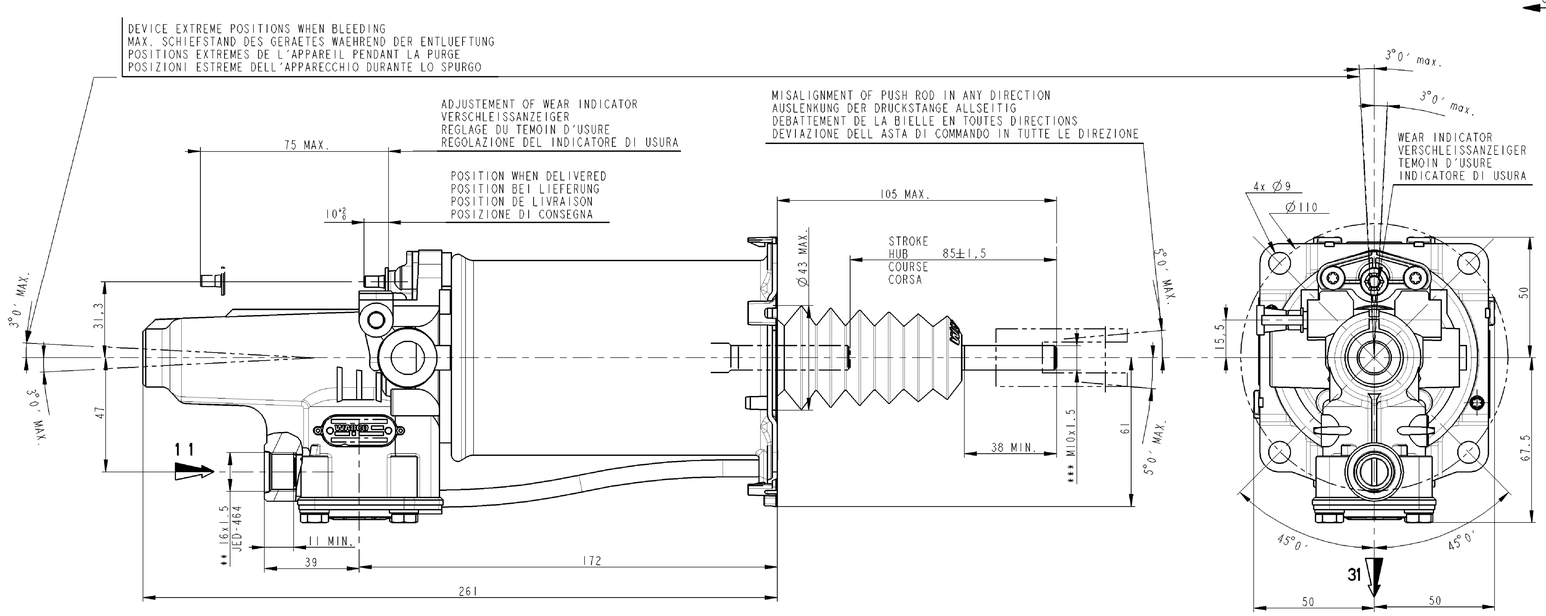

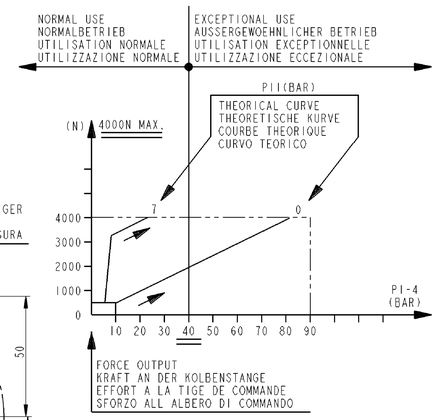

OIL VOLUME INPUT NUTZBARES HYDRAULISCHES VOLUMEN VOLUME D'HUILE ABSORBE VOLUME D'OLIO ASSORBITO		V=(SHxC)+K
K	ABSORPTION AT / AUFNAHME BEI / ABSORPTION A 90 BAR / ASSORBIMENTO A — FOR / FUER / POUR / PER C=0	K<1.5 cm3
SH	HYDRAULIC SECTIONAL AREA HYDRAULISCHER QUERSCHNITT SECTION HYDRAULIQUE SEZIONE IDRAULICO	4.89 cm2
C	GEAR DISENGAGING STROKE AUSKUPPLUNGSHUB COURSE DE DEBRAYAGE CORSA DI DISINNESTO	
HYDRAULIC FLUID HYDRAULIKFLUESSIGKEIT FLUIDE HYDRAULIQUE FLUIDO IDRAULICO	:BRAKE FLUID :BREMSFLUESSIGKEIT :GLYCERO ALCOOLIQUE :LIQUIDO PER FRENI	SAE J 1703
THERMAL RANGE THERMISCHER ANWENDUNGSBEREICH TEMPERATURE D'UTILISATION TEMPERATURA DI UTILIZZAZIONE		-30°C..+100°C
SUPPLY PRESSURE VORRATSDRUCK PRESSION PNEUMATIQUE D'ALIMENTATION PRESSIONE PNEUMATICA DI ALIMENTAZIONE		10 BAR MAX
NO STROKE LIMITER IN THE DEVICE KEIN HUBBEGRENZUNG IM GERAET PAS DE LIMITATION DE COURSE DANS L'APPAREIL NESSUNA LIMITAZIONE DI CORSA NELL'APPARECHIO		

CAUTION :DO NOT ACTUATE THE DEVICE IF NOT FITTED ON ITS MOUTING BRAKET
VORSICHT :GERAET DARF NUR IM EINGEBAUTEN ZUSTAND BETAETIGT WERDEN
ATTENTION :NE PAS ACTIONNER L'APPAREIL S'IL N'EST PAS FIXE SUR SON SUPPORT
ATTENZIONE:NON METTERE IN FUNZIONE L'APPARECCHIO SE NON E'FISSATO AL SUPPORTTO

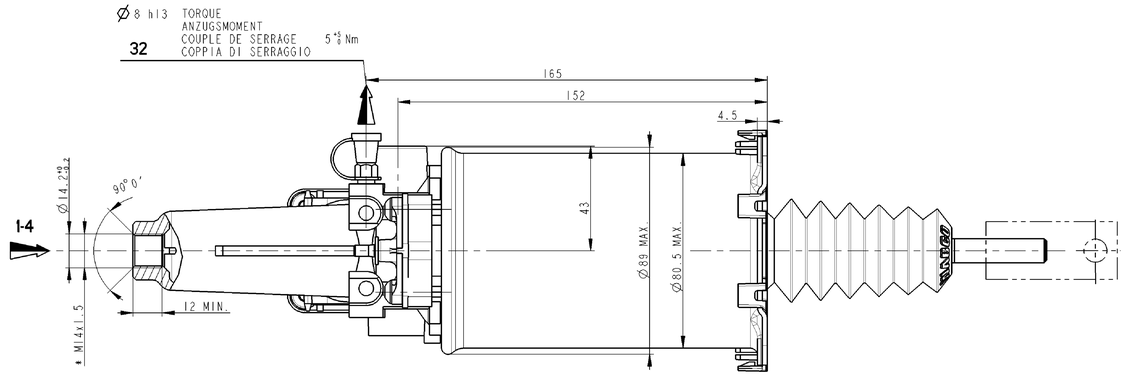

MARKING OF PORTS KENNZEICHNUNG DER ANSCHLUESSE MARQUAGE DES ORIFICES MARCATURA DEGLI ORIFIZI					
11	AIR INLET VORRATSLEITUNG ALIMENTATION AIR ALIMENTAZIONE ARIA	31	AIR EXHAUST ENTLUEFTUNG ECHAPPEMENT SCARICO		
1-4	OIL INLET OELZUFLUSS ALIMENTATION HUILE ALIMENTAZIONE OLIO	32	BLEED SCREW ENTLUEFTUNGSSCHRAUBE VIS DE PURGE VITE DI SPURGO	TORQUE FOR CONNECTIONS ANZUGSMOMENT FUER ANSCHLUESSE COUPLE DE SERRAGE DES RACCORDS COPPIA DI SERRAGGIO DEI RACCORDI	* 25 N.m MAX ** 34 N.m MAX *** 21 N.m MAX

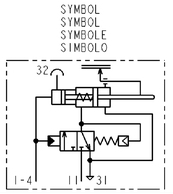

General Specifications: JED-334-0			
Further Technical Data:			
Doc. Code:	Sheet:	To:	
General Tolerances: JED-261			
	Range of Nominal Dimensions (± mm)		
Class 1)	≤ 50	> 50 ≤ 180	> 180 ≤ 400	> 400	∡
Fine	0.5	1.0	1.5	2.0	
Medium	1.0	2.0	3.0	4.0	±3°
Coarse	2.0	3.5	5.0	6.5	
Tapped Holes acc. JED-149 /100-4032					
1) Tolerance Class Applied Crossmarked					

ECN-No.	Rev.	Date
State of Revision		

Copyright WABCO ®

Date	Sign	
Drawn		
2007-02-19	SACQUET	
Checked		
2007-02-19	GAYET	
Subst.		
GAYET		

WABCO

CLUTCH-SERVO
KUPPLUNGSVERSTAERKER
SERVO-DEBRAYAGE
SERVO-FRIZIONE

Mass	Scale	Material No.	WABCO id. No.: 9200596649		
2.2 KG	1,000	970 051 464 0	Doc.Code 605	Language en/de fr/it	Sheet 1/1
Size A 1	TRI 570	Function Code 0 0 X	CAD System Pro/E	Prod.Type	Replacement for 884 011 278 0

100mm

FIRST ANGLE PROJECTION

THIS DRAWING IS RELEASED FOR LOCALIZED ASSEMBLY

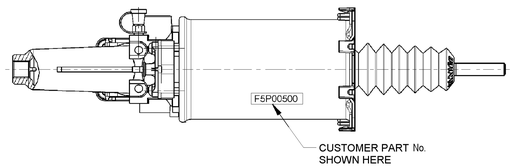

NOTES:
1. FOR PRODUCT SPECIFICATION , REFER DOC 435 OF 9700513070
2. OPEN PORTS ARE FITTED WITH CLOSURE PLUG FOR STORAGE AND TRANSIT PURPOSES

WABCO
AMBATTUR, CHENNAI - 600058, INDIA

	SIGN	DATE	MATERIAL	----
DRN	RNK	15.03.11	ALTERNATE MATERIAL	----
CHD	RBS	15.03.11	SURFACE PROTECTION	----
APD	SN	15.03.11	RAW PART No.	----

● CRITICAL
◐ MAJOR
NO SYMBOL - MINOR

CONFIDENTIAL DRAWING
THIS DRAWING IS THE SOLE PROPERTY OF WABCO. IT SHOULD NOT BE COPIED OR COMMUNICATED TO ANY PERSON WITHOUT THE WRITTEN APPROVAL OF WABCO.
© 2006

UNLESS OTHERWISE SPECIFIED ALL DIMENSIONS IN mm.
REMOVE BURRS AND SHARP EDGES FROM FINISHED PARTS.
ALL DIMENSIONS ARE AFTER SURFACE PROTECTION / TREATMENT
MALE THREAD TO IS 14962 (PART3) 6h : 2001
FEMALE THREAD TO IS 14962 (PART3) 6H : 2001

TOLERANCE FOR OPEN DIMENSIONS AS PER IS:2102 - MED

DIMENSION OVER	-	6	30	120	315	1000	2000	4000
UPTO & INC	6	30	120	315	1000	2000	4000	-
TOLERANCE	± 0.1	± 0.2	± 0.3	± 0.5	± 0.8	± 1.2	± 2.0	± 3.0

100mm

SCALE 1:1

CLUTCH-SERVO

PART No. M200810 GA