PART No.
M305640 GA

ENGINEERING CHANGES			
ECN No.	DATE	REV	SIGN
10066	28.02.06	New	PY

DO NOT SCALE IF IN DOUBT ASK

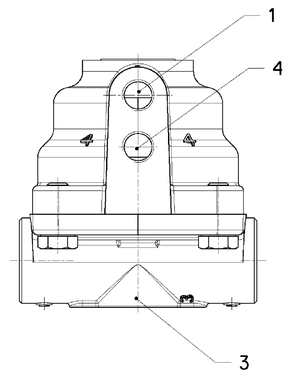

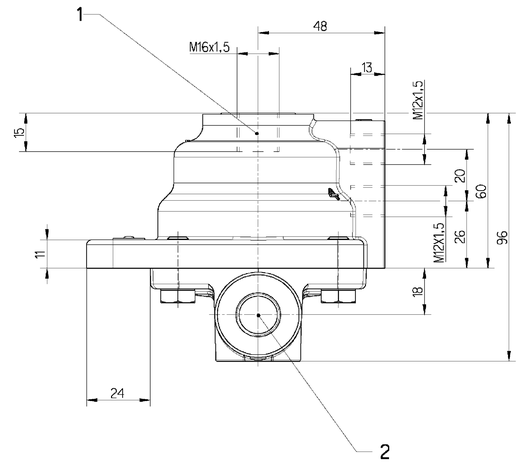

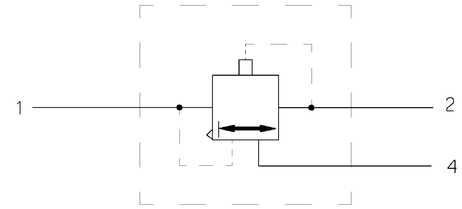

MEDIUM AIR
MEDIUM LUFT
FLUIDE AIR
FLUIDO ARIA

WORKING PRESSURE
BETRIEBSDRUCK
PRESSION D' UTILISATION
PRESSIONE DI ESERCIZIO
pe max = 10 bar

THERMAL RANGE OF APPLICATION
THERMISCHER ANWENDUNGSBEREICH
GAMME D' APPLICATION THERMIQUE
CAMPO DI APPLICAZIONE TERMICA
- 40°C....+ 80°C

INSTALLATION POSITION AS DRAWN
EINBAULAGE WIE GEZEICHNET
POSITION D' INSTALLATION SUIVANT DESSIN
POSIZIONE DI MONTAGGIO COME DISEGNATO

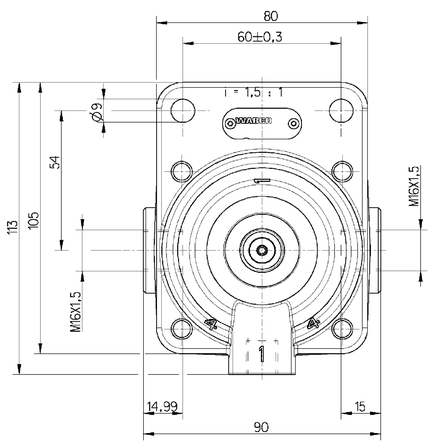

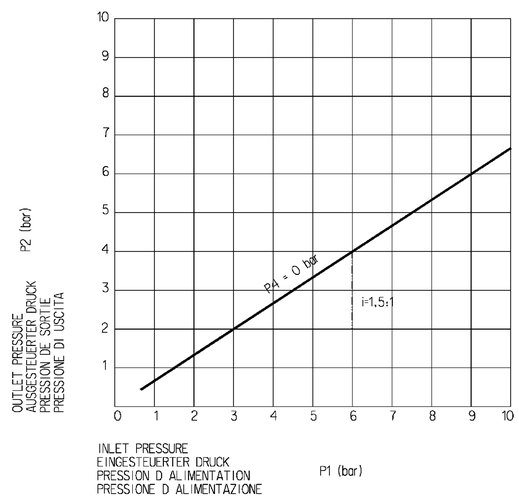

1 INLET
EINGANG
ALIMENTATION
ALIMENTAZIONE

2 OUTLET
AUSGANG
SORTIE
USCITA

3 EXHAUST
ENTLUEFTUNG
ECHAPPMENT
SCARICO

4 CONTROL PORT
STEUERANSCHLUSS
ORIFICE DE COMMANDO
ORIFIZIO DI COMANDO

Note: Comunicación reproducción o copia prohibida sin autorización de WABCO-TVS. Sin garantía. Sujeto a cambios sin previo aviso. Los productos WABCO-TVS están sujetos a cambios técnicos sin previo aviso. Los datos y dimensiones son sólo a título informativo. Para obtener información actualizada, contactar con WABCO-TVS.

Note: Reproduction, copie, diffusion interdite sans autorisation de WABCO-TVS. Sans garantie. Sujet à modifications sans préavis. Les produits WABCO-TVS sont susceptibles de modifications techniques sans préavis. Les données et dimensions ne sont qu'à titre indicatif. Pour des informations actualisées, contacter WABCO-TVS.

Note: Riproduzione, copia, diffusione vietata senza autorizzazione di WABCO-TVS. Senza garanzia. Soggetto a modifiche senza preavviso. Le caratteristiche dei prodotti WABCO-TVS sono soggette a modifiche tecniche senza preavviso. I dati e le dimensioni sono solo a titolo informativo. Per informazioni aggiornate, contattare WABCO-TVS.

Wir behalten uns das Recht vor, Kopien und Weitergabe dieser Unterlagen zu untersagen, sofern wir nicht ausdrücklich zustimmen. Keine Gewähr. Änderungen vorbehalten. Die WABCO-TVS Produkte können technischen Änderungen unterliegen. Die Daten und Abmessungen sind unverbindlich. Bitte fragen Sie bei WABCO-TVS nach aktuellen Informationen.

089969	C	05-09-27
DCN-No.	Rev.	Date

State of Revision

General Specification: JED-3341-0
Further Technical Data:
Doc. Code: Sheet: To

General Tolerances JED-2611

Class 1)	Range of Nominal Dimensions (± mm) ≤ 50	> 50 ≤ 180	> 180 ≤ 400	> 400
Fine	0.5	1.0	1.5	2.0
Medium	X 1.0	2.0	3.0	4.0
Coarse	2.0	3.5	5.0	6.5

±3°

Tapped Holes acc.
1) Tolerance Class Applied Crossmarked

Copyright WABCO ®

Date	Signature
Drawn 2005-09-27	Karthikeyan.B
Checked 05-09-27	Kiel
Expert 733	

WABCO

LOAD PROPORTIONING VALVE
LAST-LEERVENTIL
VALVE VIDE-CHARGE
VALVOLA MOTO-CARICO

Mass	Scale	Material No.	WABCO Id. No.: 473 300 014 0		
0.759 KG	1:1	473 300 014 0	Doc.Code 605	Language en/de fr/it	Sheet 1/1
Size A 1	TRI 530		Function Code	CAD System	Prod.Type 00 X
			Rev/C	Replacement for 473 300 014 0 CF 75-10-17 Rev:3	

100mm

FIRST ANGLE PROJECTION

WABCO-TVS (INDIA) LIMITED.

SCALE NTS

LOAD PROPORTIONING VALVE

PART No. M305640 GA

● CRITICAL
◐ MAJOR
NO SYMBOL - MINOR

	SIGN	DATE	MATERIAL	----
DRN	SM	16.02.06	ALTERNATE MATERIAL	----
CHD	PY	16.02.06	SURFACE PROTECTION	----
APD	SS	16.02.06	RAW PART No.	----

CONFIDENTIAL DRAWING

THIS DRAWING IS THE SOLE PROPERTY OF WABCO-TVS (INDIA) LTD.
IT SHOULD NOT BE COPIED OR COMMUNICATED TO ANY PERSON WITHOUT THE WRITTEN APPROVAL OF WABCO-TVS (INDIA) LTD. © 2006

UNLESS OTHERWISE SPECIFIED ALL DIMENSIONS IN mm.

REMOVE BURRS AND SHARP EDGES FROM FINISHED PARTS.
ALL DIMENSIONS ARE AFTER SURFACE PROTECTION/ TREATMENT

MALE THREAD TO IS 14962 (PART3) 6h : 2001
FEMALE THREAD TO IS 14962 (PART3) 6H : 2001