PART No.
M 450610 GA

ENGINEERING CHANGES			
ECN No.	DATE	REV	SIGN
9665	10.02.05	New	ASK
9672 Identification label added. Drawing redrawn.	19.02.05	1	ASK
10224 PSSC Issue No. and date updated.	26.05.06	2	ASK
10343 Dim Ø43.60±0.15 was Ø43.65±0.1 Drawing redrawn.	25.08.06	3	ASK
12083 Drawing template WABCO was WABCO-TVS (India) Ltd. Drawing pictorially modified inline with parts. Drawing redrawn.	16.03.11	4	RBS
12632 Drawing pictorially modified inline with parts diaphragm and cover. Drawing redrawn.	09.10.2013	5	DPK

DO NOT SCALE IF IN DOUBT ASK

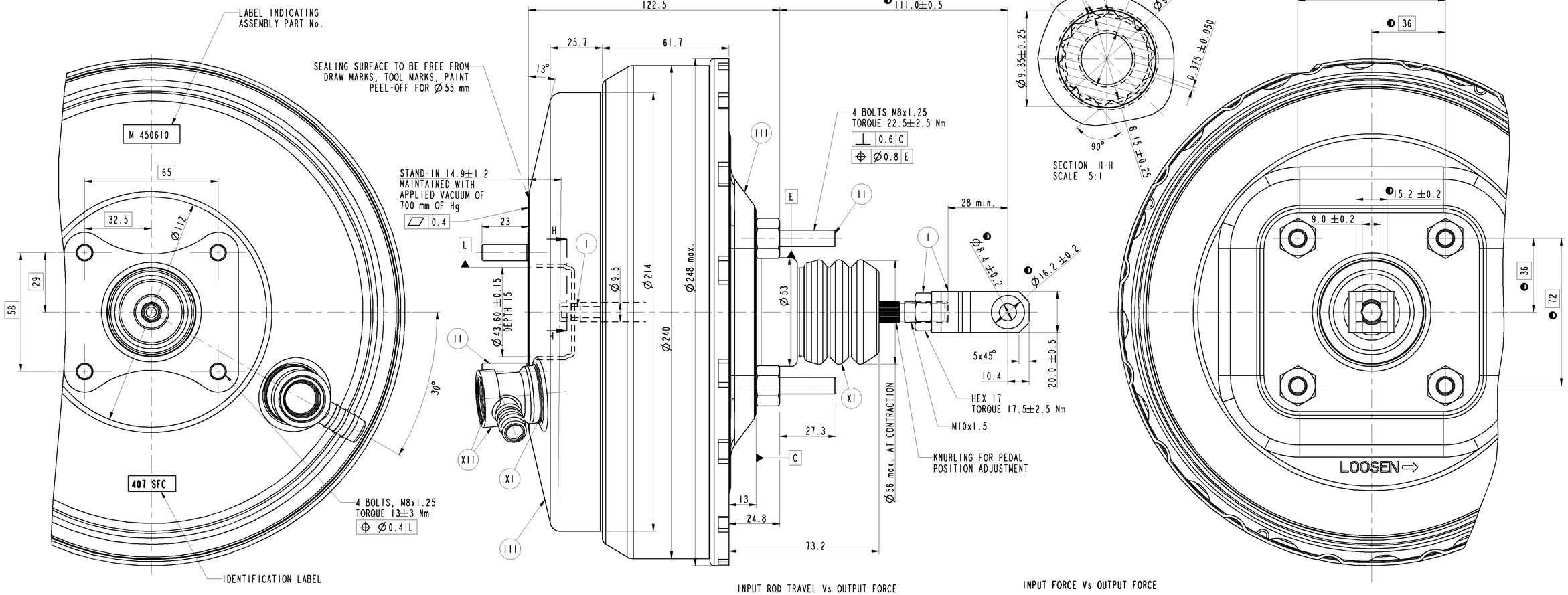

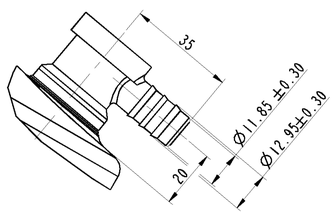

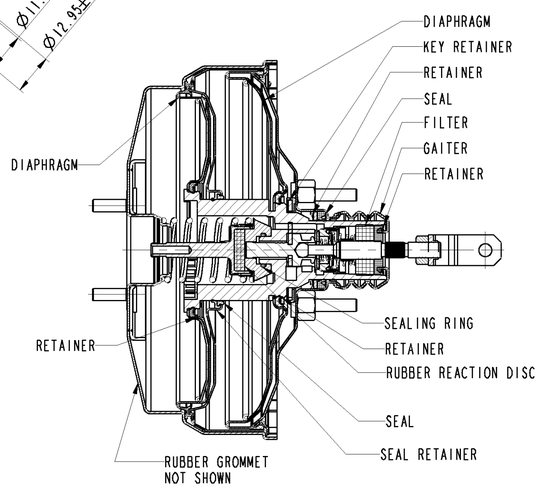

MSP 45/13 REPAIR KIT CONSISTS OF ITEMS AS SHOWN AND M929560-GREASE SACHET 2 OFF

INPUT ROD TRAVEL Vs OUTPUT FORCE
STROKE:0 mm
600 mm OF Hg

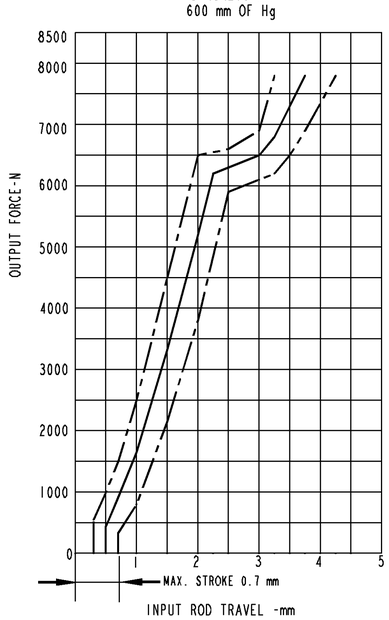

INPUT FORCE Vs OUTPUT FORCE
BOOST RATIO 6.7:1
STROKE : 10 mm

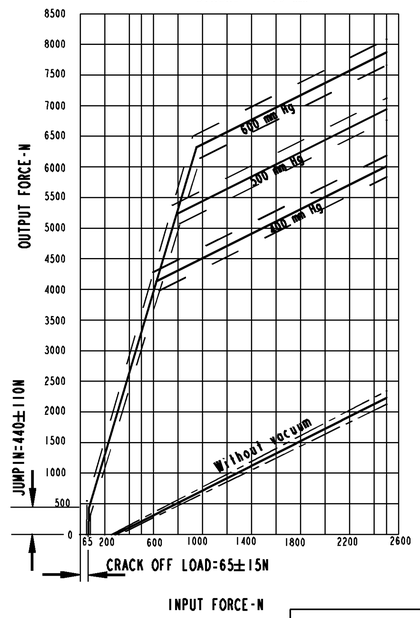

INPUT ROD TRAVEL Vs INPUT FORCE
STROKE : 10 mm
600 mm OF Hg

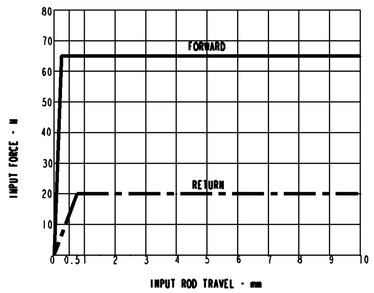

NOTES:
VALVE WILL MEET THE REQUIREMENTS AS PER JASO C452
PRODUCT SPECIFICATION NO:PSSC 144C , ISSUE No.5, DATE: 26.05.06
NOMINAL DIAMETER 225 + 200 mm
HOUSINGS COLOUR: BLACK
MINIMUM STROKE:30mm
MAXIMUM STROKE:32mm
ARTICULATION TO OPERATING ROD IN ANY DIRECTION 3°
FOR CORRECT FUNCTIONING OF THE ASSEMBLY, THE BOOSTER INPUT ROD MUST FULLY RETURN TO ORIGINAL POSITION

XVII	STEEL	NO TREATMENT	
XVI	CAST IRON	PLATED	
XV	STEEL	ZINC IRON PLATED	
XIV	CAST IRON	NO TREATMENT	
XIII	ZINC ALLOY	ANODISED	
XII	PLASTIC	NO TREATMENT	
XI	RUBBER	NO TREATMENT	
X	STAINLESS STEEL	NO TREATMENT	
IX	BRASS	NO TREATMENT	
VIII	ZINC ALLOY	CHROMATED	
VII	ALUMINIUM ALLOY	ANODISED	
VI	ALUMINIUM ALLOY	CHROMATED	
V	CAST IRON	PAINTED	
IV	STEEL	POWDER COATED	
III	STEEL	PAINTED	
II	STEEL	PHOSPHATED	
I	STEEL	ZINC PLATED	
PART CODE	MATERIAL	SURFACE PROTECTION	

● CRITICAL
◐ MAJOR
NO SYMBOL - MINOR

	SIGN	DATE	MATERIAL	----
DRN	TJ	09.10.2013	ALTERNATE MATERIAL	----
CHD	DPK	09.10.2013	SURFACE PROTECTION	REFER TABLE
APD	AGM	09.10.2013	RAW PART No.	----

CONFIDENTIAL DRAWING
THIS DRAWING IS THE SOLE PROPERTY OF WABCO. IT SHOULD NOT BE COPIED OR COMMUNICATED TO ANY PERSON WITHOUT THE WRITTEN APPROVAL OF WABCO.
© 2005

UNLESS OTHERWISE SPECIFIED ALL DIMENSIONS IN mm.
REMOVE BURRS AND SHARP EDGES FROM FINISHED PARTS.
ALL DIMENSIONS ARE AFTER SURFACE PROTECTION/ TREATMENT
MALE THREAD TO IS 14962 (PART3) 6h : 2001
FEMALE THREAD TO IS 14962 (PART3) 6H : 2001

GENERAL TOLERANCES

RANGE OF NOMINAL DIMENSIONS (± mm)				∢	FORCE, POWER, PRESSURE etc.,
≤ 50	> 50 ≤ 180	> 180 ≤ 400	> 400	(± °)	(± %)
1	2	3	4	3	10

100 mm

SCALE 1:1

WABCO
AMBATTUR, CHENNAI - 600058, INDIA

DOUBLE DIAPHRAGM VACUUM BRAKE VALVE

PART No. M 450610 GA