PART No. M 450621 GA

ENGINEERING CHANGES			
ECN No.	DATE	REV	SIGN
10041	03.02.06	New	ASK
10224 PSSC Issue No. and date updated.	26.05.06	1	ASK
12632 Drawing pictorially modified inline with parts diaphragm and cover. Drawing redrawn.	09.10.2013	2	DPK

DO NOT SCALE IF IN DOUBT ASK

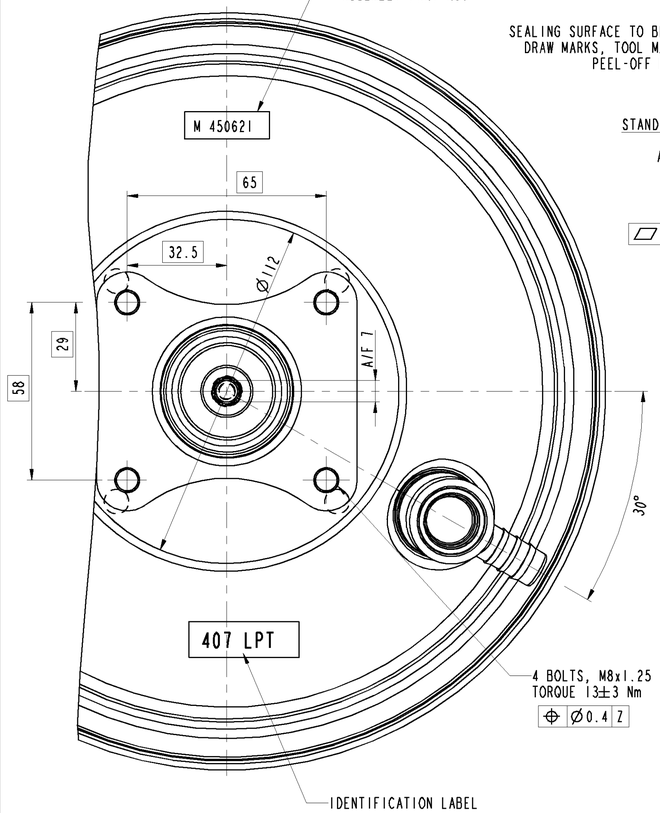

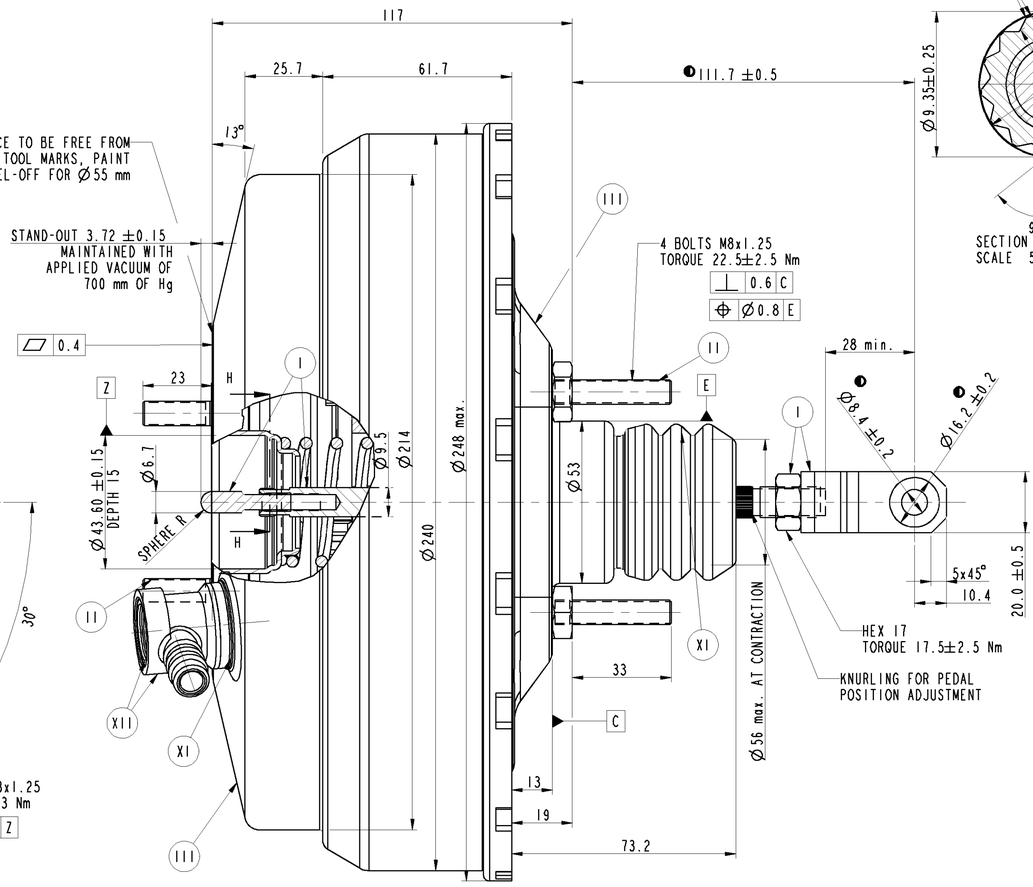

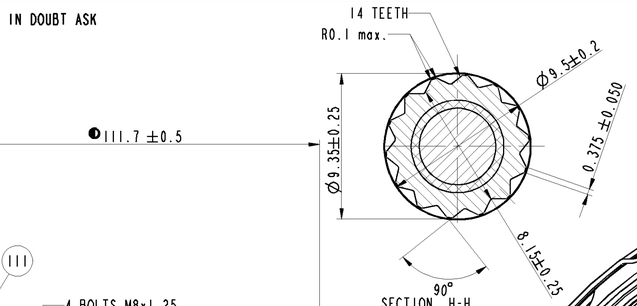

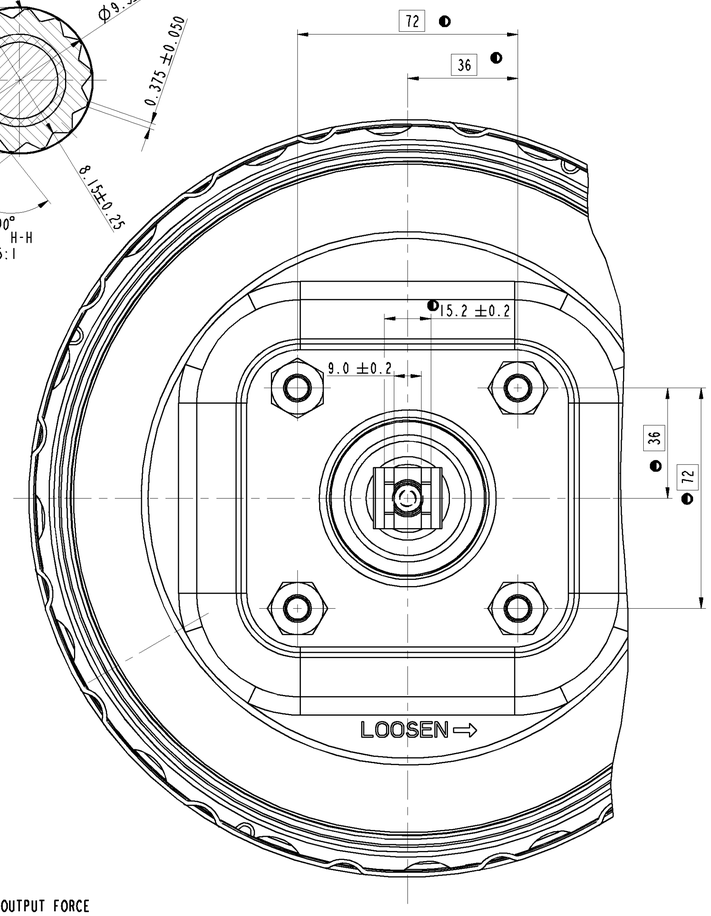

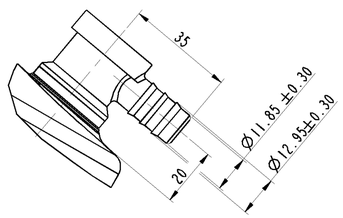

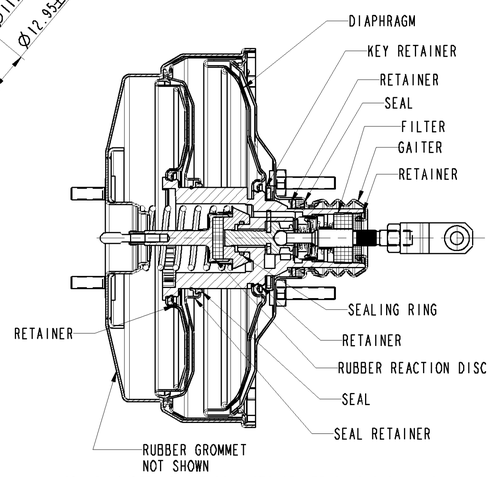

MSP 45/13 REPAIR KIT CONSISTS OF ITEMS AS SHOWN AND M929560-GREASE SACHET 2 OFF

XIV	STEEL	ZINC IRON PLATED
XIII	ZINC ALLOY	ANODISED
XII	PLASTIC	NO TREATMENT
XI	RUBBER	NO TREATMENT
X	STAINLESS STEEL	NO TREATMENT
IX	BRASS	NO TREATMENT
VIII	ZINC ALLOY	CHRONATED
VII	ALUMINIUM ALLOY	ANODISED
VI	ALUMINIUM ALLOY	CHRONATED
V	CAST IRON	PAINTED
IV	STEEL	POWDER COATED
III	STEEL	PAINTED
II	STEEL	PHOSPHATED
I	STEEL	ZINC PLATED
PART CODE	MATERIAL	SURFACE PROTECTION

INPUT ROD TRAVEL Vs OUTPUT FORCE
STROKE:0 mm
600 mm OF Hg

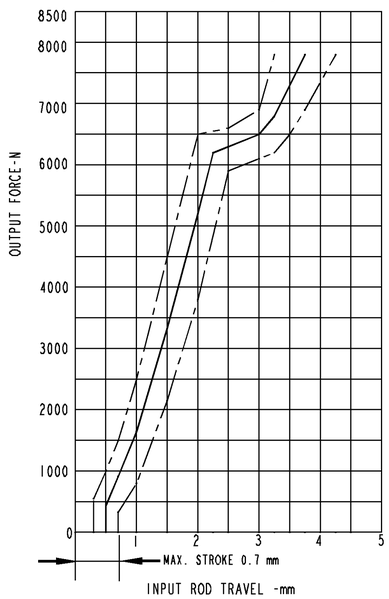

INPUT FORCE Vs OUTPUT FORCE
BOOST RATIO 6.7:1
STROKE : 10 mm

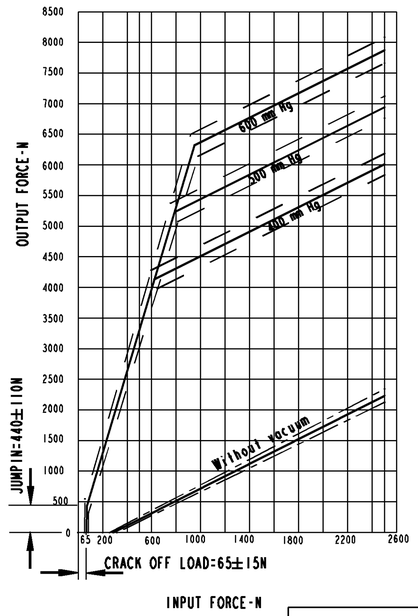

INPUT ROD TRAVEL Vs INPUT FORCE
STROKE : 10 mm
600 mm OF Hg

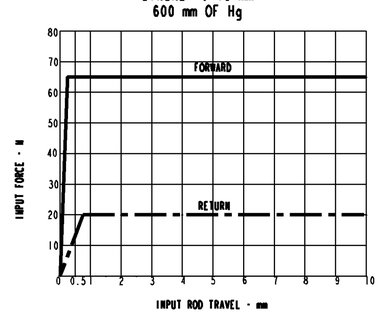

NOTES:
VALVE WILL MEET THE REQUIREMENTS AS PER JASO C452
PRODUCT SPECIFICATION NO:PSSC 144C , ISSUE No.5, DATE:26.05.06
WEIGHT : 4.6 kg
NOMINAL DIAMETER 225 + 200 mm
HOUSINGS COLOUR : BLACK
MINIMUM STROKE : 30mm
MAXIMUM STROKE : 32mm
ARTICULATION TO OPERATING ROD IN ANY DIRECTION 3°
FOR CORRECT FUNCTIONING OF THE ASSEMBLY, THE BOOSTER INPUT ROD MUST FULLY RETURN TO ORIGINAL POSITION

● CRITICAL
◐ MAJOR
NO SYMBOL - MINOR

	SIGN	DATE		
			MATERIAL	--
DRN	TJ	09.10.2013	ALTERNATE MATERIAL	--
CHD	DPK	09.10.2013	SURFACE PROTECTION	REFER TABLE
APD	AGM	09.10.2013	RAW PART No.	--

CONFIDENTIAL DRAWING
THIS DRAWING IS THE SOLE PROPERTY OF WABCO. IT SHOULD NOT BE COPIED OR COMMUNICATED TO ANY PERSON WITHOUT THE WRITTEN APPROVAL OF WABCO.
© 2006

UNLESS OTHERWISE SPECIFIED ALL DIMENSIONS IN mm.
REMOVE BURRS AND SHARP EDGES FROM FINISHED PARTS.
ALL DIMENSIONS ARE AFTER SURFACE PROTECTION/ TREATMENT
MALE THREAD TO IS 14962 (PART3) 6h : 2001
FEMALE THREAD TO IS 14962 (PART3) 6H : 2001

GENERAL TOLERANCES

RANGE OF NOMINAL DIMENSIONS (± mm)				∡	FORCE, POWER, PRESSURE etc.,
≤ 50	> 50 ≤ 180	> 180 ≤ 400	> 400	(± °)	(± %)
1	2	3	4	3	10

100 mm

WABCO
AMBATTUR, CHENNAI - 600058, INDIA

SCALE 1:1

DOUBLE DIAPHRAGM VACUUM BRAKE VALVE

PART No. M 450621 GA