PART No.	
M500290etc	GA

ENGINEERING CHANGES

ECN.No.	DATE	REV.	SIGN.
6780	19-2-93	New	
6802	21.04.93	1	
DIM 35, 5 AND 31 were 39, 12 and 35 respectively. Tightening torque values added to Breather and Switch assy. DIM 9 added			
6883	29 09 93	2	
Label '75MM STROKE' added			
6960	04.02.94	3	
'75 MM STROKE' Label revised incorporating the Part Number.			
6759	23 05 94	4	
View for PDC version added			
11374	09.02.09	5	RBS
In name plate, company name changed from Sundaram Clayton Ltd to WABCO - TVS (INDIA) Ltd. Drawing redrawn.			
11406	10.03.09	6	VPS
In assy No. M500290, Customer Part No. lable added. Drawing redrawn			
12083	16.03.11	7	RBS
Drawing template WABCO was SUNDARAM CLAYTON LTD. Drawing pictorially modified inline with parts. Drawing redrawn.			

DO NOT SCALE IF IN DOUBT ASK.

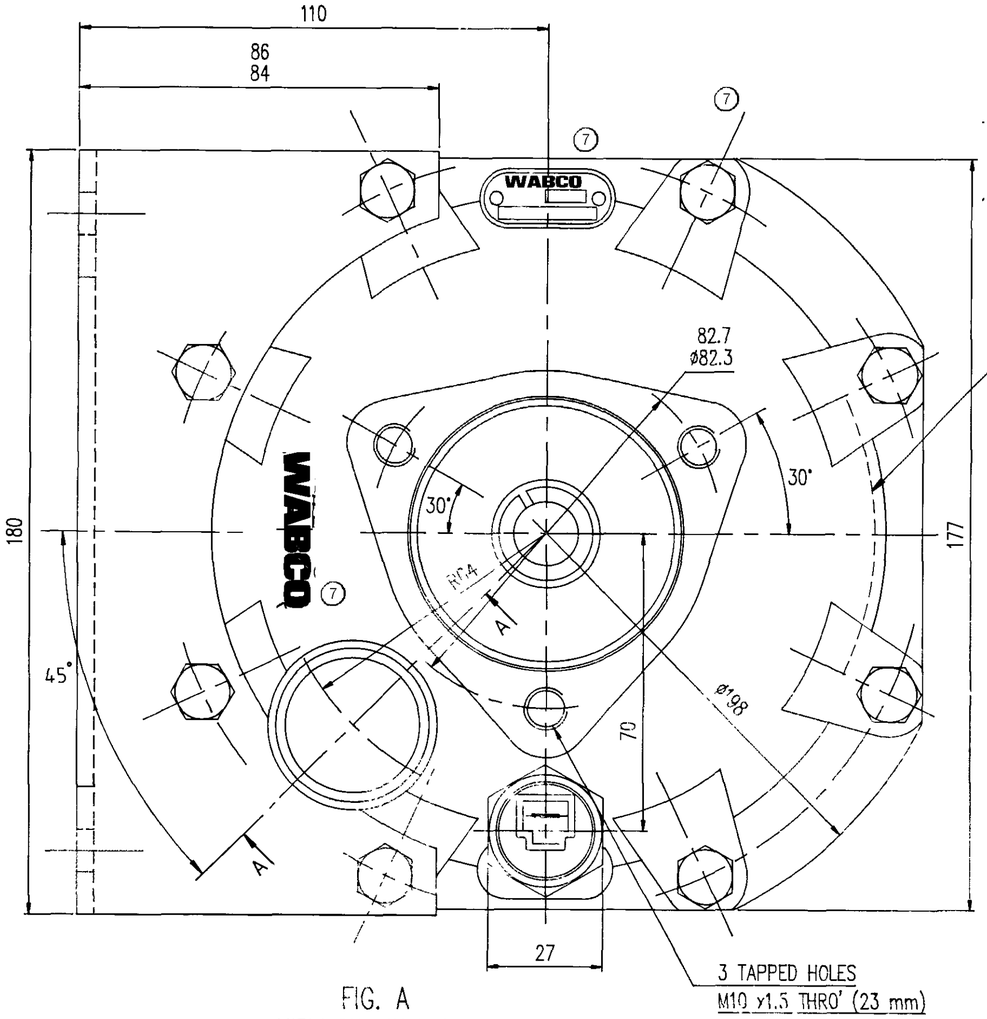

FIG. A
VIEW SHOWN WITHOUT BOOT

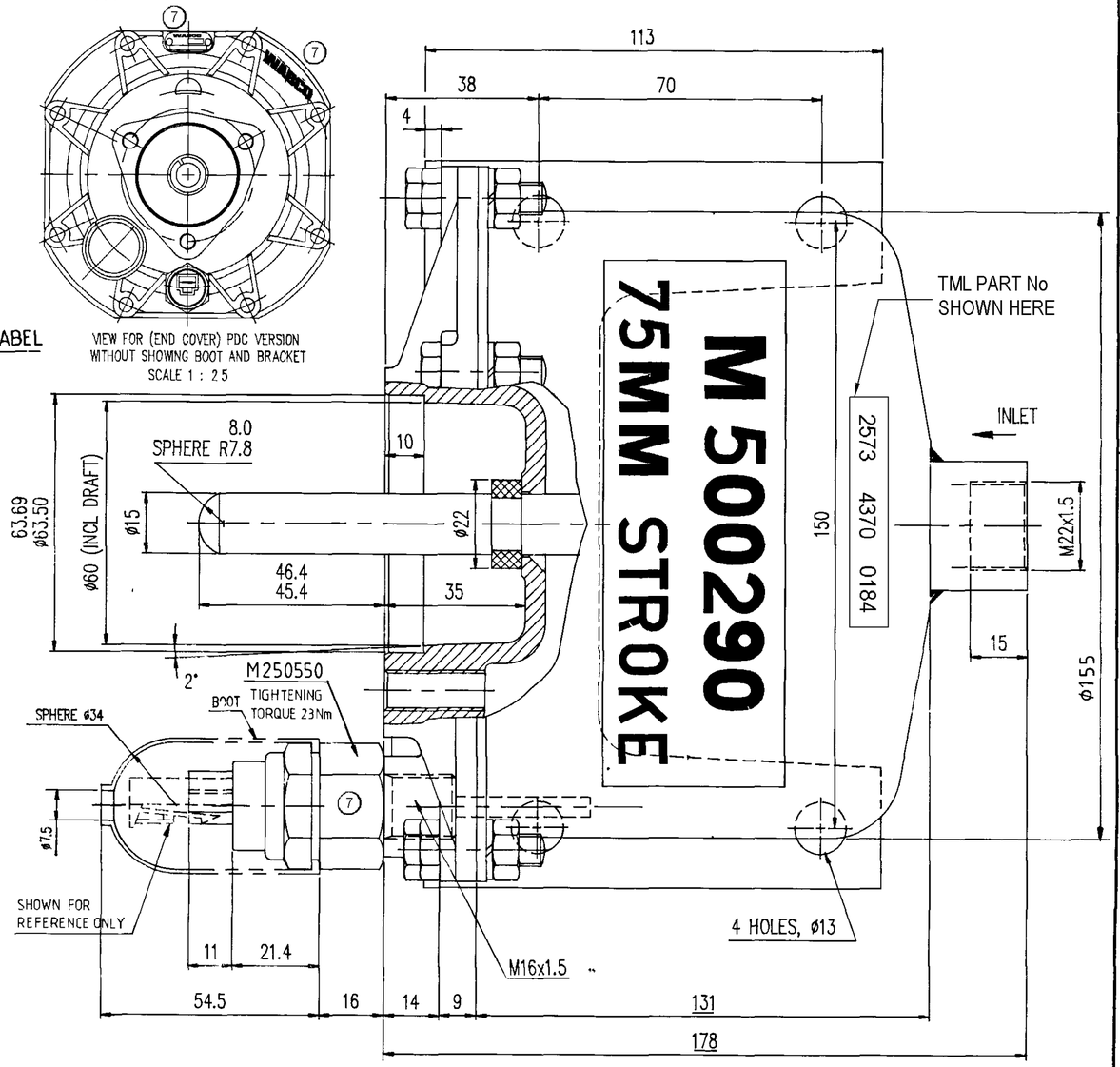

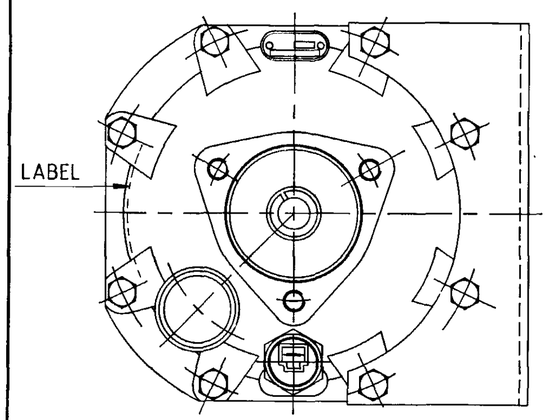

FIG. B
SCALE 1:2
VIEW SHOWN
WITHOUT BOOT

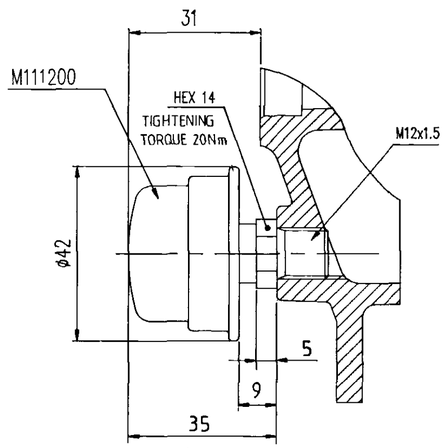

A–A

PRODUCT SPECIFICATION
FOR EXCESS STROKE WARNING SWITCH : PSSC 72C
CYLINDER BORE : ø150
STROKE : 75.0/72.5 mm
STROKE AT WHICH WARNING SWITCH COMES ON:55/60 mm
OUTPUT FORCE AT 8 bar PRESSURE : 1300 kg
WORKING PRESSURE : 8 bar max.
THERMAL RANGE OF APPLICATION : −15°C TO +70°C
NOMINAL WEIGHT : 4.7 kg
OPEN PORT IS FITTED WITH CLOSURE PLUG FOR STORAGE AND TRANSIT PURPOSES.
PART No. AND BATCH No. ARE PUNCHED ON THE NAME PLATE

PART No.	BRACKET/ LABEL POSITION	CUSTOMER LABLE PART No.
M500290	FIG. A	BASIC DRAWING
M500300	FIG. B	---

GENERAL TOLERANCES					
RANGE OF NOMINAL DIMENSIONS (± mm)				∠	FORCE, POWER, PRESSURE etc.,
≤ 50	> 50 ≤ 180	> 180 ≤ 400	> 400	(± °)	(± %)
1	2	3	4	3	10

WABCO
AMBATTUR, CHENNAI - 600058, INDIA

	SIGN.	DATE	MATERIAL	—
DRN.	MD	13.03.11	ALTERNATE MATERIAL	—
CHD.	RBS	13.03.11	SURFACE PROTECTION	—
APD.	SN	13.03.11	RAW PART No.	—

CONFIDENTAL DRAWING
THIS DRAWING IS THE SOLE PROPERTY OF WABCO. IT SHOULD NOT BE COPIED OR COMMUNICATED TO ANY PERSON WITHOUT THE WRITTEN APPROVAL OF WABCO.
© 1993

UNLESS OTHERWISE SPECIFIED ALL DIMENSIONS IN mm
REMOVE BURRS AND SHARP EDGES FROM FINISHED PARTS
ALL DIMENSIONS ARE AFTER SURFACE PROTECTION / TREATMENT
MALE THREAD TO IS : 14962 (PART 3)6:2001
FEMALE THREAD TO IS : 14962 (PART 3)6R:2001

TOLERANCE FOR OPEN DIMENSIONS AS PER IS: 2102–MED.

DIMENSION	OVER	—	6	30	120	315	1000	2000	4000
	UPTO & INCL	6	30	120	315	1000	2000	4000	—
TOLERANCE		±0.1	± 0.2	±0.3	± 0.5	± 0.8	± 1.2	± 2.0	± 3.0

SCALE
1 : 1,1 : 2

AIR CYLINDER WITH
WARNING SWITCH AND BREATHER

PART No.
M 500290etc
GA

MX2340000etc GA

100 mm