PART No.
M800811 GA

ENGINEERING CHANGES			
ECN No.	DATE	REV	SIGN
9624	13.01.05	N	MS
10913	14.09.07	1	PY
Port No.1 and 2 added. Drawing redrawn.			
11615	31.10.09	2	KB
Drawing converted from ACAD to PRO-E.Drawing pictorially modified in line with Body M344341. Drawing redrawn.			
12083	16.03.11	3	RBS
Drawing template WABCO was WABCO - TVS (INDIA) LTD. Drawing redrawn.			

DO NOT SCALE IF IN DOUBT ASK

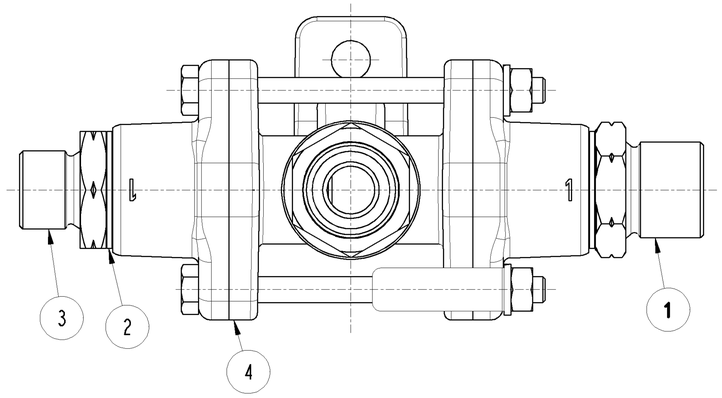

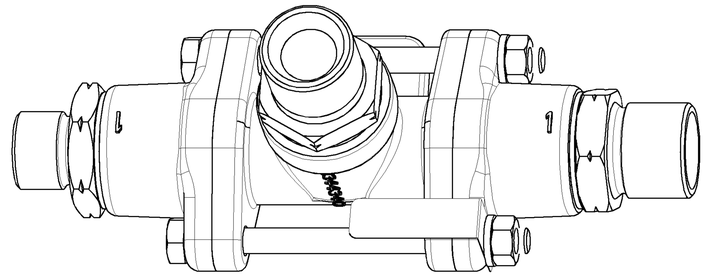

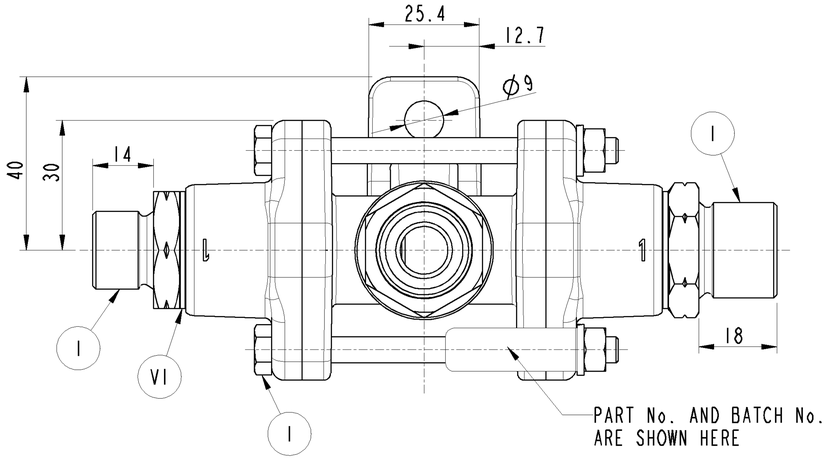

SL.No.	FITTING	WTIL PART No.	VFJ PART No.	QTY.
1	ADAPTOR M22xM22	M926810		2 OFF
2	SEALING WASHER Ø22	M911840		3 OFF
3	ADAPTOR M22xM18	M922780		1 OFF
4	DOUBLE CHECK VALVE	M800220		1 OFF

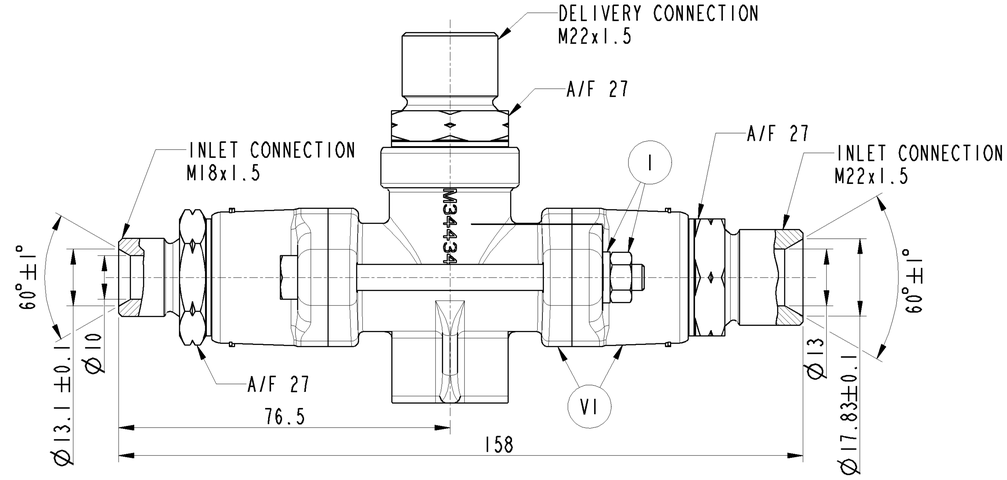

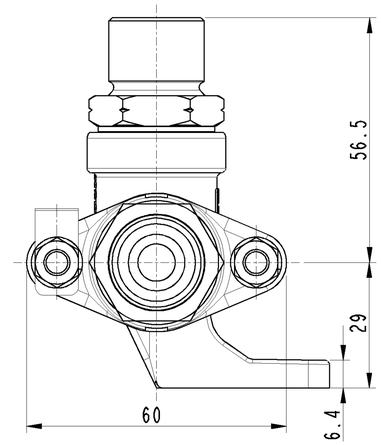

XVI	CAST IRON	PLATED
XV	STEEL	ZINC IRON PLATED
XIV	CAST IRON	NO TREATMENT
XIII	ZINC ALLOY	ANODISED
XII	PLASTIC	NO TREATMENT
XI	RUBBER	NO TREATMENT
X	STAINLESS STEEL	NO TREATMENT
IX	BRASS	NO TREATMENT
VIII	ZINC ALLOY	CHROMATED
VII	ALUMINIUM ALLOY	ANODISED
VI	ALUMINIUM ALLOY	CHROMATED
V	CAST IRON	PAINTED
IV	STEEL	POWDER COATED
III	STEEL	PAINTED
II	STEEL	PHOSPHATED
I	STEEL	ZINC PLATED
PART CODE	MATERIAL	SURFACE PROTECTION

● CRITICAL
◐ MAJOR
NO SYMBOL - MINOR

NOTES:
1. PRODUCT SPECIFICATION No. PSSC 12C
   ISSUE No.3 DATE: 09.08.00
2. WEIGHT : 0.48 kg
3. ALL THE FITTINGS ARE TO BE SUITABLY PROTECTED TO PREVENT DAMAGES DURING HANDLING, STORAGE, PACKAGING AND DELIVERY.

WABCO
AMBATTUR, CHENNAI - 600058, INDIA

	SIGN	DATE		
			MATERIAL	----
DRN	EY	13.3.11	ALTERNATE MATERIAL	----
CHD	RBS	13.3.11	SURFACE PROTECTION	REFER TABLE
APD	SN	13.3.11	RAW PART No.	----

CONFIDENTIAL DRAWING
THIS DRAWING IS THE SOLE PROPERTY OF WABCO. IT SHOULD NOT BE COPIED OR COMMUNICATED TO ANY PERSON WITHOUT THE WRITTEN APPROVAL OF WABCO.
© 2005

UNLESS OTHERWISE SPECIFIED
ALL DIMENSION IN mm.
REMOVE BURRS AND SHARP EDGES FROM FINISHED PARTS.
ALL DIMENSIONS ARE AFTER SURFACE PROTECTION / TREATMENT
MALE THREAD TO IS 14962 (PART3) 6h : 2001
FEMALE THREAD TO IS 14962 (PART3) 6H : 2001

GENERAL TOLERANCES

RANGE OF NOMINAL DIMENSIONS (± mm)				∠	FORCE, POWER, PRESSURE etc.,
≤ 50	> 50 ≤ 180	> 180 ≤ 400	> 400	(± °)	(± %)
1	2	3	4	3	10

100 mm

SCALE 1:1

DOUBLE CHECK VALVE WITH END FITTINGS

PART No.
M800811 GA