MATERIAL AND SURFACE PROTECTION	
I	JED-029 M1 / C JED-259-3
II	PBT-GF black JED-352-1
III	JED-051 M4 / JED-739-3
IV	POM black JED-005 M1
V	NBR JED-235
VI	AL JED-077 M1 / JED-007-1
VII	PET-GF black JED-357-1
VIII	Fe JED-048 M1 / phos. / JED-731-6
IX	JED-050-M1 / JED-739-3

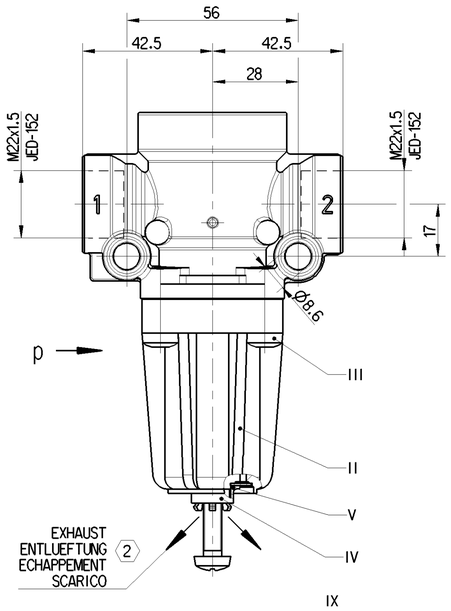

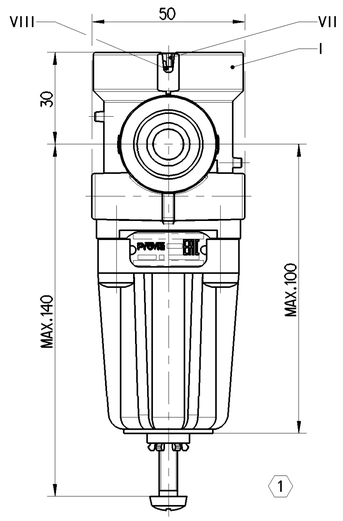

MEDIUM: AIR
MEDIUM: LUFT
FLUIDE: AIR
FLUIDO: ARIA

THERMAL RANGE OF APPLICATION:
THERMISCHER ANWENDUNGSBEREICH:
GAMME D' APPLICATION THERMIQUE:
CAMPO DI APPLICAZIONE TERMICA: -40° ... +80°C

NOMINAL DIAMETER NENNWEITE DIAMETRE NOMINAL DIAMETRO NOMINALE	SUPPLY: BELUEFTUNG: ALIMENTATION: ALIMENTAZIONE:	Ø10	EXHAUST: ENTLUEFTUNG: ECHAPPEMENT: SCARICO:	Ø4

INSTALLATION POSITION AS DRAWN EINBAULAGE WIE GEZEICHNET POSITION D' INSTALLATION SUIVANT DESSIN POSIZIONE DI MONTAGGIO COME DISEGNATO	±45°	PROTECTED GESCHUETZT PROTEGES PROTETTI	±90°

1 = INLET PRESSURE
EINGESTEUERTER DRUCK
PRESSION D' ALIMENTATION
PRESSIONE DI ALIMENTAZIONE
pe max.=20bar

2 = DELIVERY PRESSURE
AUSGESTEUERTER DRUCK
PRESSION DELIVREE
PRESSIONE EROGATA

TORQUE FOR CONNECTIONS:
ANZUGSMOMENT FUER EINSCHRAUBSTUTZEN:
COUPLE DE SERRAGE DES RACCORDS:
COPPIA DI SERRAGGIO DEI RACCORDI: M22x1.5 : Mmax.=53 Nm

1 ADJUSTMENT MARKED WITH PAINT
EINSTELLUNG MIT LACK GEKENNZEICHNET
AJUSTAGE MARQUE AVEC VERNIS
REGOLAZIONE MARCATO CON VERNICE

2 EXHAUST FREE FROM PAINT
ENTLUEFTUNG FARBFREI
ECHAPPEMENT SANS PEINTURE
SCARICO SENZA VERNICE

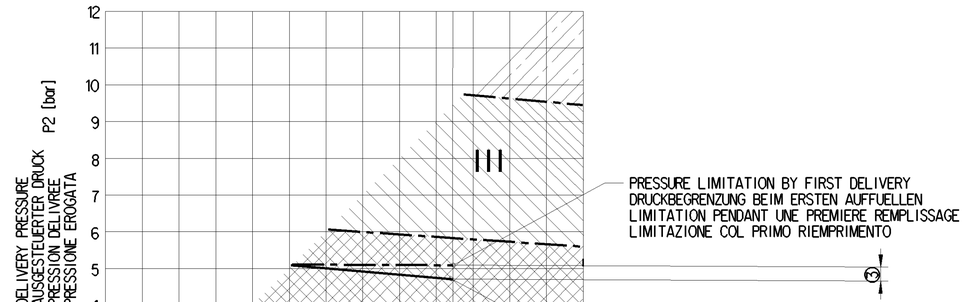

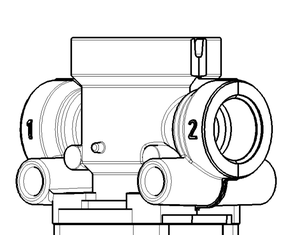

IT IS FORBIDDEN TO ASSEMBLE THE PLV IF IT IS UNDERGONE A SHOCK BEFORE
ES IST VERBOTEN DEN PLV ZU MONTIEREN, WENN ER ZUVOR AUF DEN BODEN GEFALLEN IST
IL EST INTERDIT D'ASSEMBLER UN PLV SI IL A SUBI UN CHOCK AUPARAVANT
E VIETATO DI CONGEGNARE UN PLV SE A SUBITO UN URTO PRIMA

12.5	10 ± 0.3	0.4	
1 P1 [bar]	2 P2 [bar]	3 P3 MAX. [bar]	RANGE OF ADJUSTMENT EINSTELLBEREICH GAMME DE REGLAGE CAMPO DI REGOLAZIONE

PARAMETER	RESISTANCE TO -40°	RESISTANCE TO +110°	RESISTANCE TO +80°
PRESSURE LIMITATION DURING FIRST REFILLING	≤ 10.6	≤ 10.3	≤ 10.3
PRESSURE LIMITATION AFTER CONSUMPTION	10.3 -0.8	10.1 -0.8	9.8 -0.8

General Specification: JED-334-1 , Size ISO 14405 LP						
Further Technical Data:						
Doc. Code:			Sheet:		To	
General Tolerances JED-261						
		Range of Nominal Dimensions (± mm)				
Class 1)		≤ 50	> 50 ≤ 180	> 180 ≤ 400	> 400	
Fine		0.5	1.0	1.5	2.0	±3°
Medium	X	1.0	2.0	3.0	4.0	
Coarse		2.0	3.5	5.0	6.5	
Tapped Holes acc. -						
1) Tolerance Class Applied Crossmarked						

Copyright WABCO®

Date	Signature
Drawn 2018-09-18	Aswinkumar
Checked 2018-09-20	Vallarasu
Expert KP NAGARAJAN	

ProVia

PRESSURE LIMITING VALVE
DRUCKBEGRENZUNGSVENTIL
VALVE DE LIMITATION DI PRESSION
VALVOLA LIMITATRICE DI PRESSIONE

Mass	Scale	Material No.	Date of first issue	
0.416 KG	1:1	PRO 010 301 0	Doc.Code 005	Language ML / Sheet 1/1
Size A 1	CAD System CREO	EDN-No. 177205 / Revision 1 A / Techn. Resp. 5160_AM	Replacement for -	

100mm

Tutti i diritti riservati. Non è permesso consegnare a terzi o riprodurre questo documento, né utilizzare il contenuto o renderlo comunque noto a terzi senza esplicita autorizzazione scritta. Il mancato rispetto comporta il pagamento di danni. Tutti i diritti derivanti da brevetti o modelli.
Copyright of this document and giving it to others and the use or communication of the contents thereof, are forbidden without express authority. Offenders are liable to the payment of damages. All rights created by patent grant or registration of a utility model or design, are reserved.
Tous droits de propriété intellectuelle réservés, notamment en matière de brevets et de modèles.
Weitergabe sowie Vervielfältigung dieser Unterlage, Verwertung und Mitteilung ihres Inhalts nicht gestattet, soweit gesetzlich zulässig. Zuwiderhandlungen verpflichten zu Schadensersatz. Alle Rechte für den Fall der Patent- oder Gebrauchsmustererteilung vorbehalten.