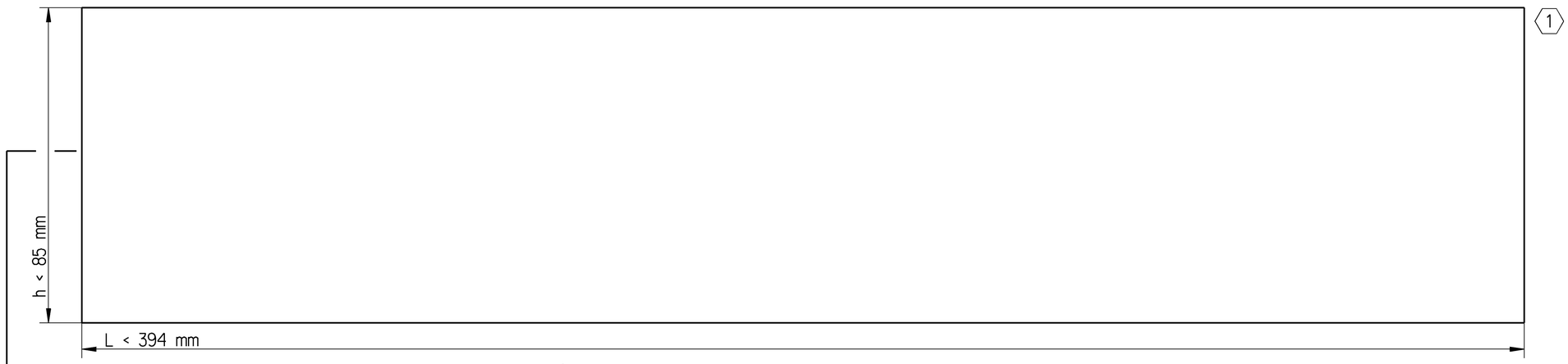

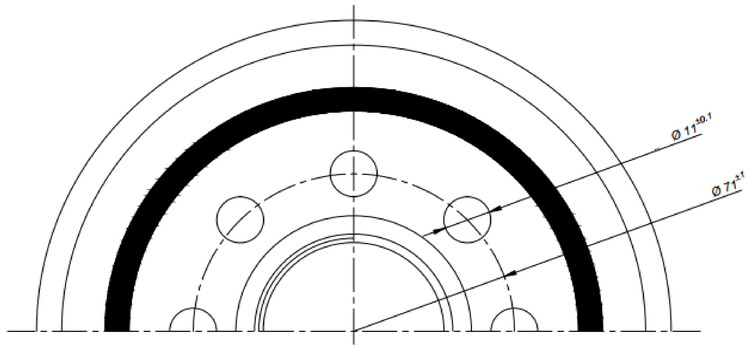

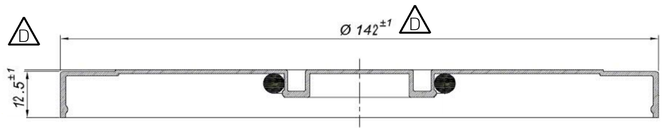

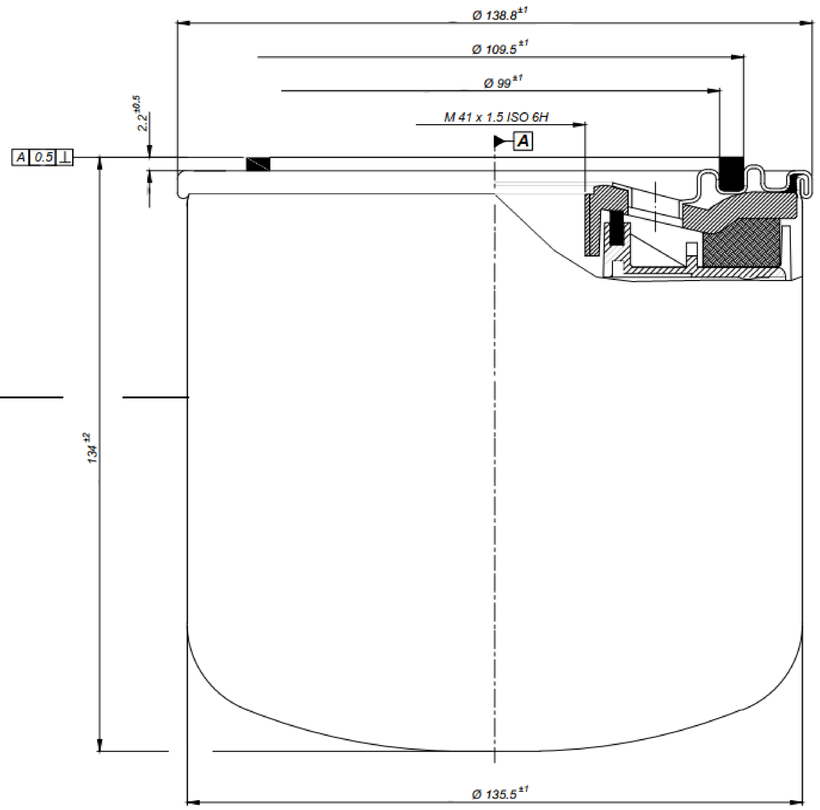

TECHNICAL SPECIFICATION:

1. THE MAX. WORKING PRESSURE IS 14 BAR.
2. THE BURST PRESSURE MORE THAN 23 BAR.
3. THE PRINTING IS RED (PANTONE 187), THE LETTERING IS WHITE (RAL 9010).
4. THERMAL RANGE OF APPLICATION -40°C TO + 80°C.
5. MOUNTING INTERFACE M41X1,5.

(1) ARTWORK ACCORDING TO THE LABELING INFORMATION DOC. CODE 922

General Specification: ISO 8015, JED-334-1, Size ISO 14405 LP

Further Technical Data: Product Specification

Doc. Code: 035 | Sheet: 1 To 3

General Tolerances JED-261

Class 1)		Range of Nominal Dimensions (± mm) ≤ 50	> 50 ≤ 180	> 180 ≤ 400	> 400	∡
Fine		±0.5	±1	±1.5	±2	±3°
Medium	X	±1	±2	±3	±4	
Coarse		±2	±3.5	±5	±6.5	

Tapped Holes acc. -

1) Tolerance Class Applied Crossmarked

Copyright ZF®

Date	Signature
Drawn	
2026-04-09	Pakula
Checked	
2026-04-09	Pawlowski

140 x 137 x 137
Dimensions in mm

ProVia

COMPACT DESICCANT CARTRIDGE

Mass	Scale	Material No.	Date of first issue: 2020-08-18		
2.0 kg	1:1	PRO 124 000 2	Doc.Code	Language	Sheet
			005	EN	1/1
Size	CAD System				
A 2	PDF				

ECN-No.	Revision	Techn. Resp.	Replacement for
521595	2 x D	5059_AM	-

100mm

Non è permesso consegnare a terzi o riprodurre questo documento, né utilizzarne il contenuto o renderlo comunque noto a terzi senza autorizzazione esplicita. Ogni infrazione costituirà un evidente abuso e comporterà il risarcimento dei danni subiti. E' fatta riserva di tutti i diritti derivanti da brevetti o modelli.

Copying of this document and giving it to others and the use or communication of the contents thereof, are forbidden without express authority. Contravention of this restriction will constitute an evident abuse and result in a liability to the payment of damages. All rights are reserved in the event of the grant of patent or registration of a utility model or design. This document is the subject of copyright.

Toute Communication ou reproduction de ce document, toute exploitation ou communication de son contenu sont interdites, sauf autorisation expresse. Tout manquement à cette règle constitue un abus évident et expose son auteur au versement de dommages et intérêts. Tous droits de propriété industrielle réservés, notamment en matière de brevets et de modèles.

Weitergabe sowie Vervielfältigung dieser Unterlage, Verwertung und Mitteilung ihres Inhalts nicht gestattet, soweit nicht ausdrücklich zugesichert. Zuwiderhandlungen stehen einer öffentlichen Mißbrauch dar und verpflichten zu Schadenersatz. Alle Rechte für den Fall der Patenterteilung oder Gebrauchsmuster-Eintragung vorbehalten.