<1>	SAFETY CHARACTERISTICS	0
<2>	SIGNIFICANT CHARACTERISTICS	0
<C>	CUSTOMER INTERFACE	6

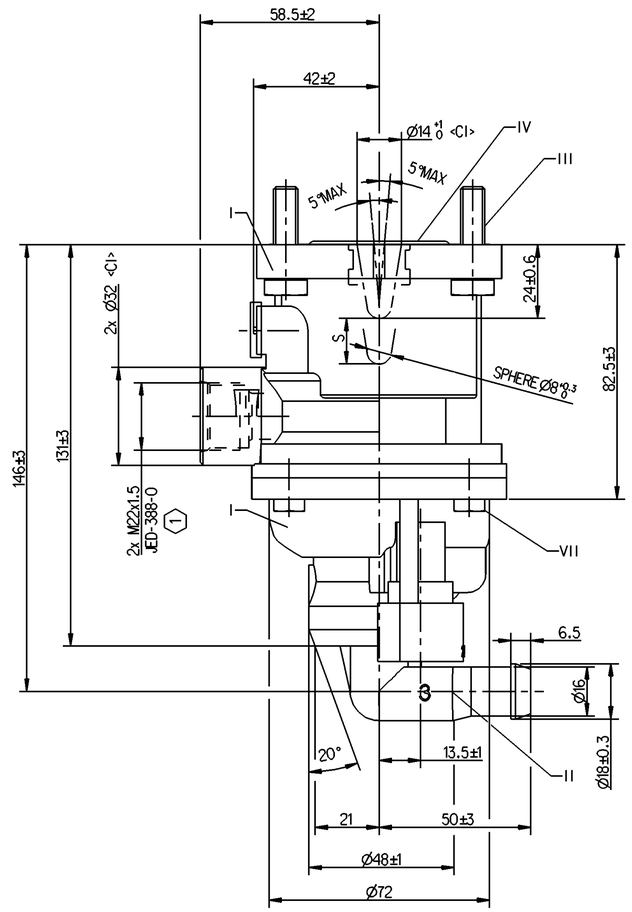

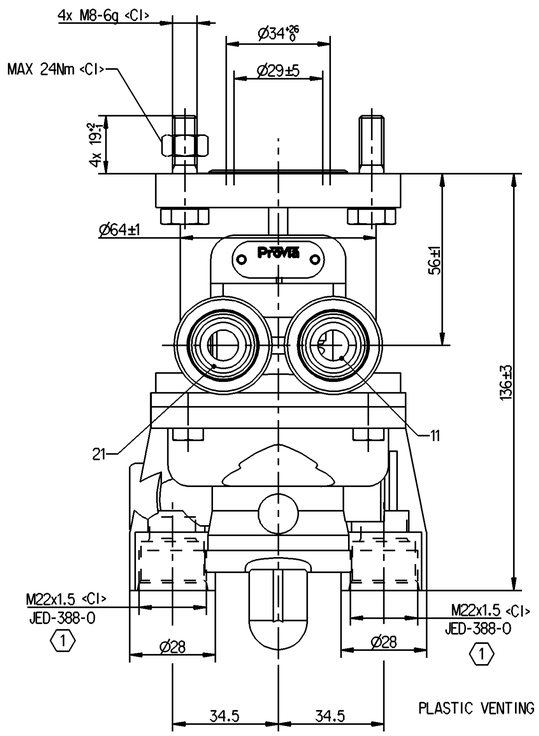

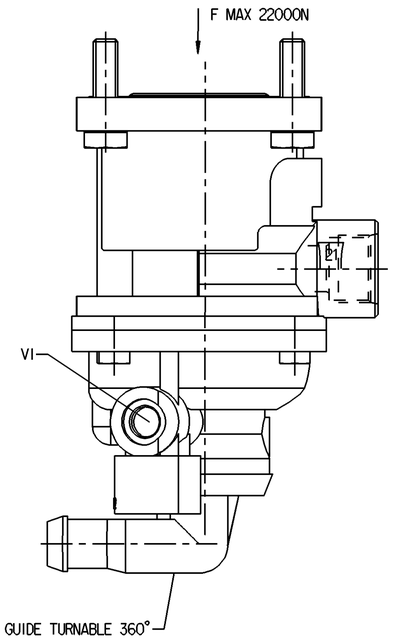

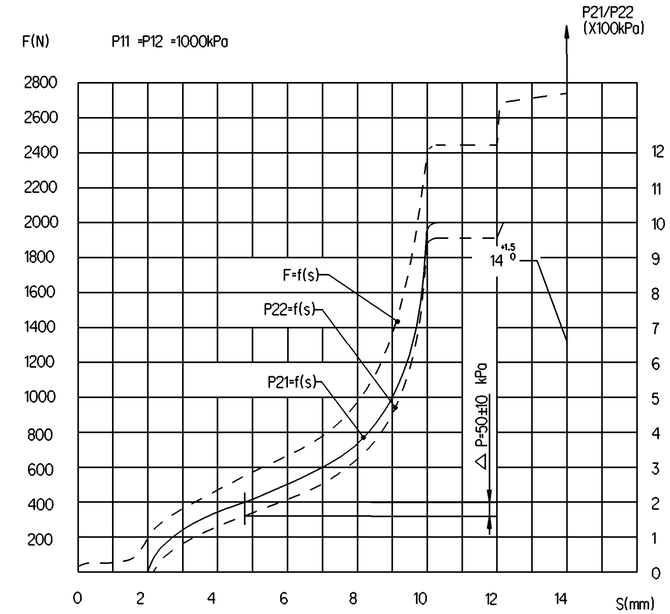

AT FAILURE CIRCUIT 1:NECESSARY STROKE S ≥ 14mm
NECESSARY FORCE F= 2600 N

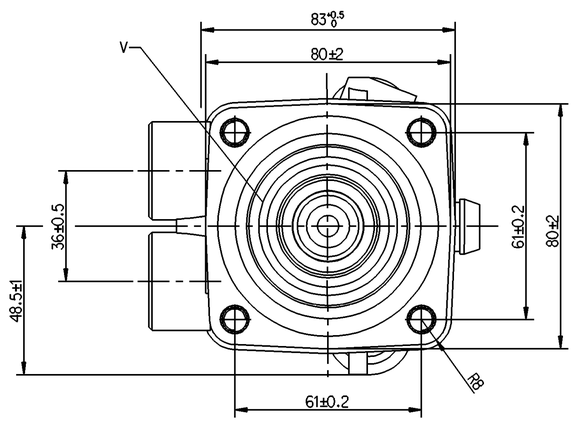

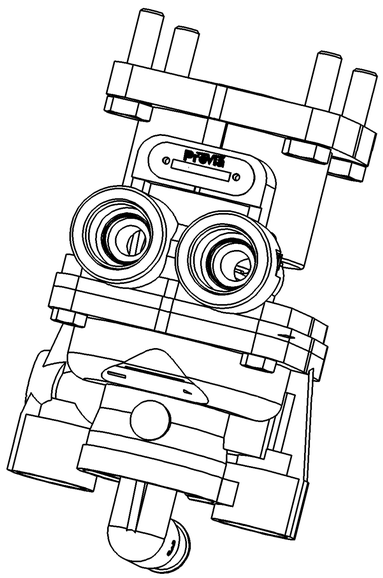

SCHEMATIC DIAGRAM

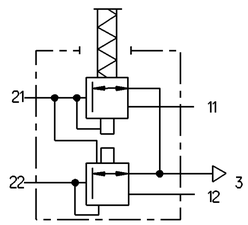

11/12 SUPPLY

21/22 OUTLET

3 EXHAUST

1 TORQUE 53Nm MAX

NAME PLATE DETAEILS

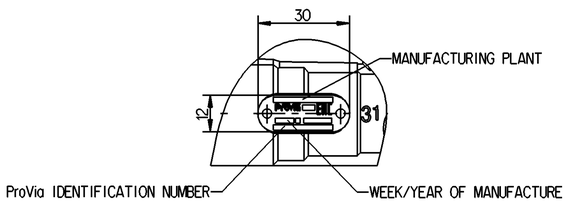

MATERIAL AND SURFACE PROTECTION

S.No.	MATERIAL	SURFACE PROTECTION
I	ALUMINIUM ALLOY	CHROMA TED
II	PLASTIC	NO TREATMENT
III	STEEL	ZINC PLATED
IV	RUBBER	NO TREATMENT
V	PLASTIC	NO TREATMENT
VI	STAINLESS STEEL	
VII	STEEL	ZINC PLATED

TECHNICAL DATA

S.No.	NOTES	
1	PRODUCT FUNCTION AND RELIABILITY	
2	WORKING MEDIUM	AIR
3	NORMAL WORKING PRESSURE	10 bar
4	MAXIMUM WORKING PRESSURE	13 bar
5	NOMINAL DIAMETER(78.5 mm sq)	Ø10 mm
6	THERMAL RANGE OF APPLICATION	-40°C TO +80°C

General Specification: JED-331-1 , Size ISO 11105 LF
Further Technical Data: FTD 315 000 0
Doc. Code: D35 — Sheet: 01 To 07

General Tolerances JED-261

Class 1)	Range of Nominal Dimensions (± mm)				
	≤ 50	> 50 ≤ 180	> 180 ≤ 400	> 400	
Fine	0.5	1.0	1.5	2.0	±3°
Medium	1.0	2.0	3.0	4.0	
Coarse	2.0	3.5	5.0	6.5	

Tapped Holes acc. JED-388-0
1) Tolerance Class Applied Crossmarked

Copyright WABCO

Date	Signature
Drawn 2019-12-16	Saravanan
Checked 2019-12-20	Yerahachelvan
Expert	Aswinkumar

ProVia

FOOT BRAKE VALVE

Mass	Scale	Material No.	Date of first issue: 2019-12-20		
1.15 KG	1:1	PRO 315 004 0	Doc.Code 005	Language EN	Sheet 1/1
Size A 1	CAD System CREO	ECN-No. - / Revision - / Techn. Resp. 5180_AM	Replacement for -		

100mm

Toute Communication ou reproduction de ce document, toute exploitation ou communication de son contenu sont interdites, sauf autorisation écrite. Tous droits de propriété industrielle réservés, notamment en matière de brevets et de modèles.

Weitergabe sowie Verwertung dieser Unterlage, Verwertung und Mitteilung ihres Inhalts nicht gestattet, soweit nicht ausdrücklich zugestanden. Zuwiderhandlungen verpflichten zu Schadensersatz. Alle Rechte vorbehalten, insbesondere für Patent- und Gebrauchsmustereintragung.

Non è permesso consegnare a terzi o riprodurre questo documento, né utilizzarne il contenuto o renderlo comunque noto a terzi senza esplicita autorizzazione. Tutti i diritti di proprietà industriale sono riservati, in particolare quelli di brevetto o di registrazione di modelli.

Copying of this document and giving it to others and the use or communication of the contents thereof, are forbidden without express authority. Offenders are liable to the payment of damages. All rights are reserved in the event of the grant of patent or registration of a utility model or design. This document is the subject of copyright.