<1>	SAFETY CHARACTERISTICS	0
<2>	SIGNIFICANT CHARACTERISTICS	0
<CI>	CUSTOMER INTERFACE	6

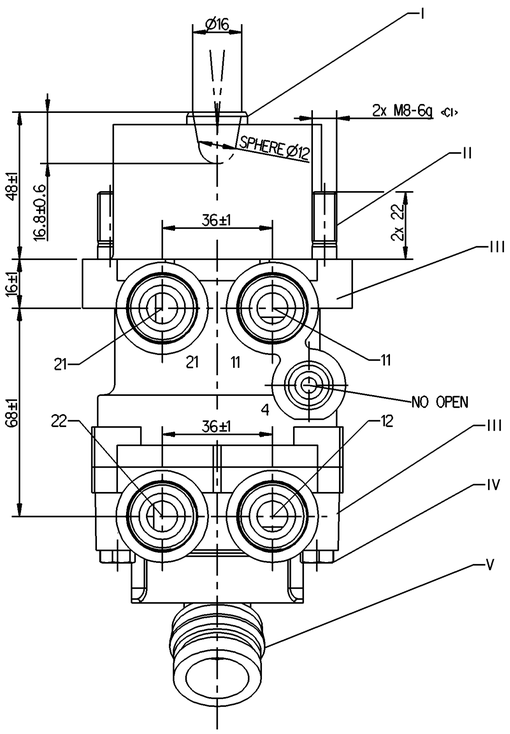

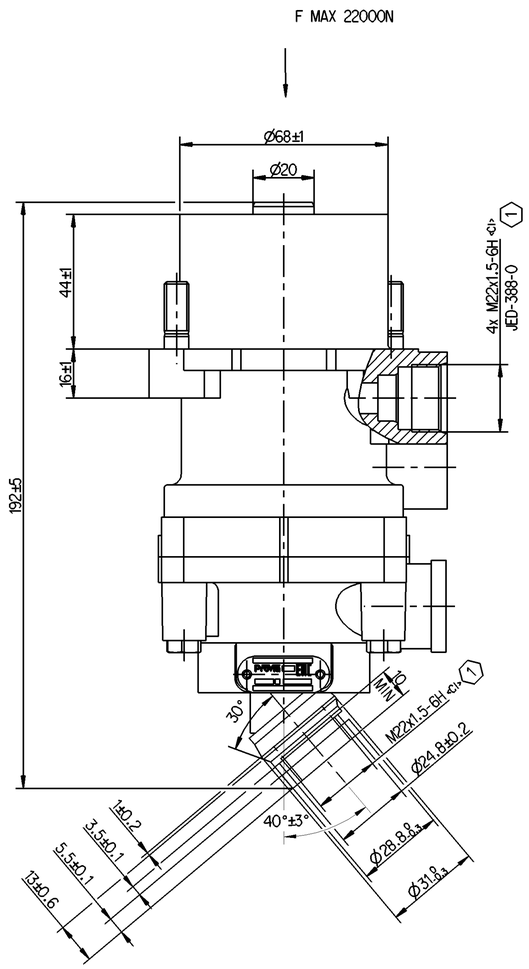

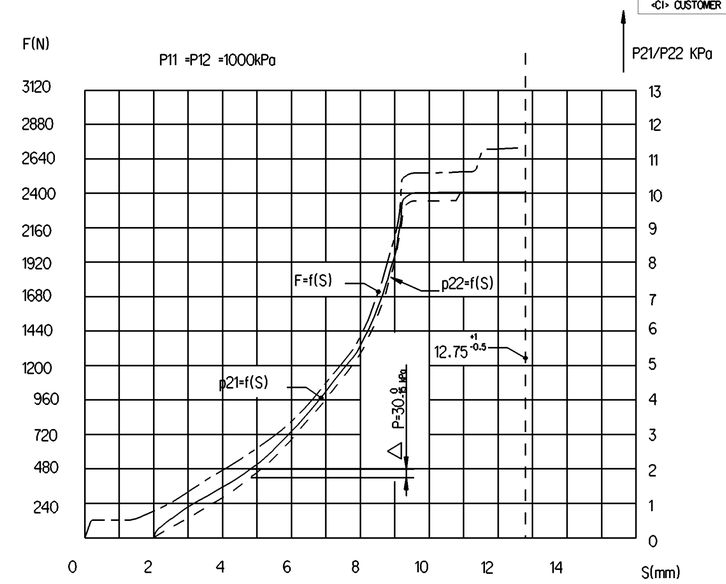

AT FAILURE CIRCUIT 1:NECESSARY STROKE S ≥ 12mm
NECESSARY FORCE F= 4100 N

COURSE WITHOUT LOAD UNTIL BEGINING OF PRESSURE INCREASE : 2±0.5mm

COURSE UNTIL REACHING DELIVERT OF 3 bar : 7.2 - 5 ($6^{+1.2}_{-1}$)mm

COURSE UNTIL REACHING DELIVERY OF 10 bar : 8 - 10 (9±1)mm

TOTAL COURSE UNTIL STOP IN THE DEVICE : 13.75 - 12.25mm ($12.75^{+1}_{-0.5}$)mm

PRESSURE PREDOMINACE OF FIRST CIRCUIT COMPARED TO SECOND CIRCUIT (ΔP): $30^{+0}_{-0.15}$kPa

(1) TORQUE 53Nm MAX

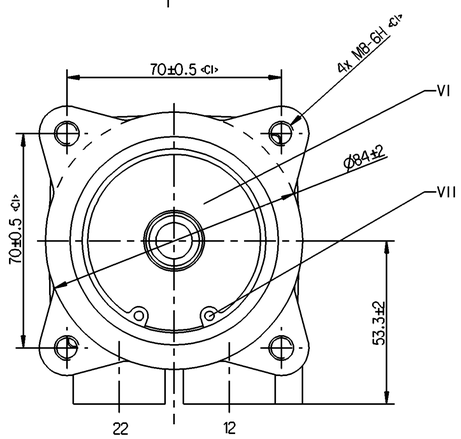

NAME PLATE DETAILS

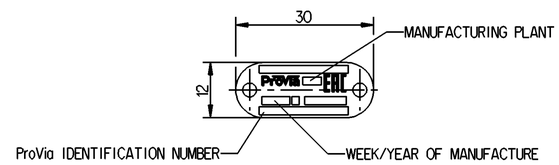

TECHNICAL DATA

S.No.	NOTES	
1	PRODUCT FUNCTION AND RELIABILITY	
2	WORKING MEDIUM	AIR
3	NORMAL WORKING PRESSURE	10 bar
4	MAXIMUM WORKING PRESSURE	12 bar
5	NOMINAL DIAMETER(78.5 mm sq)	Ø10 mm
6	THERMAL RANGE OF APPLICATION	-40°C TO +80°C

MATERIAL AND SURFACE PROTECTION

S.No.	MATERIAL	SURFACE PROTECTION
I	STEEL	ZINC PLATED
II	STEEL	ZINC PLATED
III	ALUMINIUM ALLOY	CHROMA TED
IV	STEEL	ZINC PLATED
V	PLASTIC	NO TREATMENT
VI	RUBBER	NO TREATMENT
VII	STEEL	ZINC PLATED

SCHEMATIC DIAGRAM

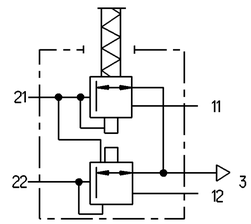

General Specification: JED-334-1 , Size ISO 14405 LP
Further Technical Data: PRO 315 000 0
Doc. Code: 035 Sheet: 01 To 07

General Tolerances JED-261

Class 1)	Range of Nominal Dimensions (± mm) ≤ 50	> 50 ≤ 180	> 180 ≤ 400	> 400	
Fine	0.5	1.0	1.5	2.0	
Medium X	1.0	2.0	3.0	4.0	±3°
Coarse	2.0	3.5	5.0	6.5	

Tapped Holes acc.JED-388-0
1) Tolerance Class Applied Crossmarked

Copyright WABCO®

Date	Signature
Drawn 2019-12-17	Saravanan
Checked 2019-12-20	Yerahachelvan
Expert Aswinkumar	

WABCO

FOOT BRAKE VALVE

Mass	Scale	Material No.	Date of first issue: 2019-12-20		
1.75 KG	1:1	PRO 315 007 0	Doc.Code 005	Language EN	Sheet 1/1
Size A 1	CAD System CREO				

EOH-No.	Revision	Techn. Resp.	Replacement for
-	-	5180_AM	

100mm

Toute Communication ou reproduction de ce document, toute exploitation ou communication de son contenu sont interdites, sauf autorisation écrite. Tous droits de propriété industrielle réservés, notamment en matière de brevets et de modèles.

Weitergabe sowie Vervielfältigung dieser Unterlage, Verwertung und Mitteilung ihres Inhalts nicht gestattet, soweit nicht ausdrücklich zugestanden. Zuwiderhandlungen verpflichten zu Schadensersatz. Alle Rechte für den Fall der Patenterteilung oder Gebrauchsmustereintragung vorbehalten.

Non è permesso consegnare a terzi o riprodurre questo documento, né utilizzarne il contenuto o renderlo comunque noto a terzi senza esplicita autorizzazione. Ogni violazione comporta obbligo di risarcimento danni. Ci riserviamo il diritto di brevetti o modelli.

Copying of this document and giving it to others and the use or communication of the contents thereof, are forbidden without express authority. Offenders are liable to the payment of damages. All rights are reserved in the event of the grant of a patent or registration of a utility model or design. This document is the subject of copyright.