<1>	SAFETY CHARACTERISTICS	0
<2>	SIGNIFICANT CHARACTERISTICS	0
<C1>	CUSTOMER INTERFACE	7

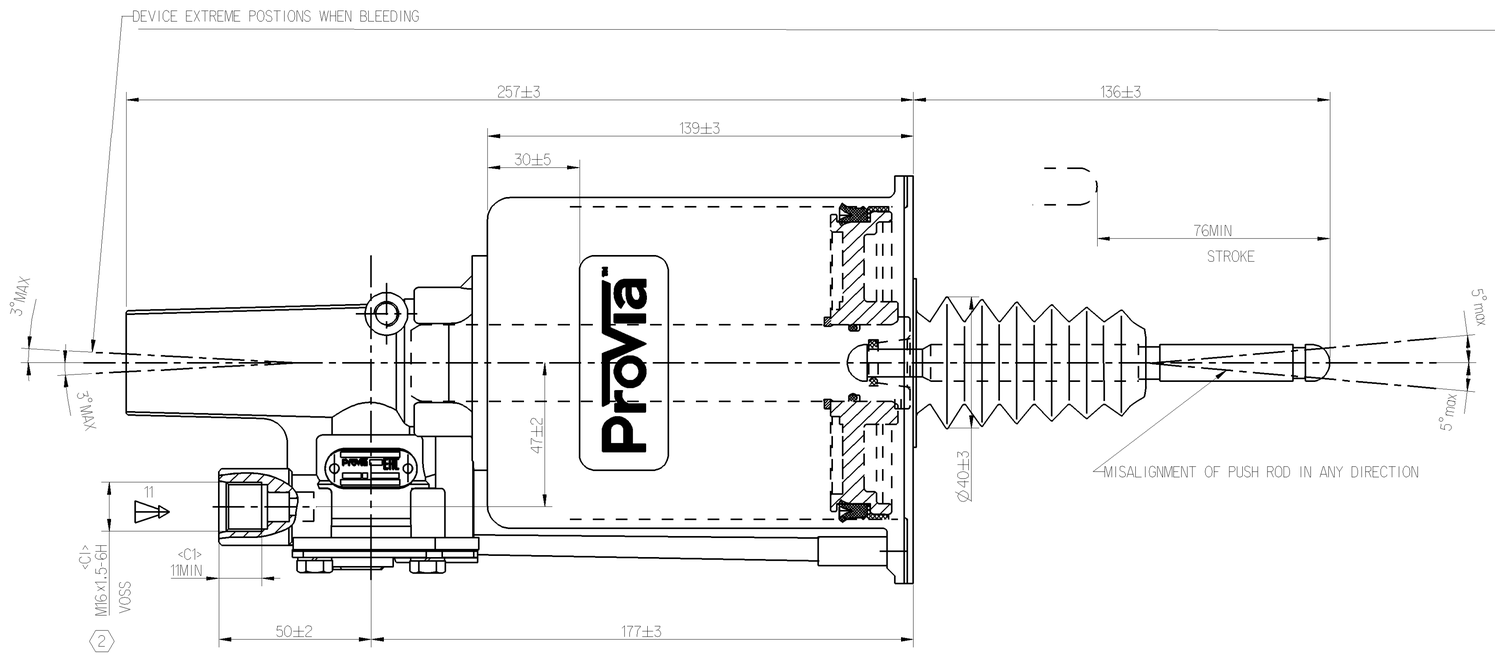

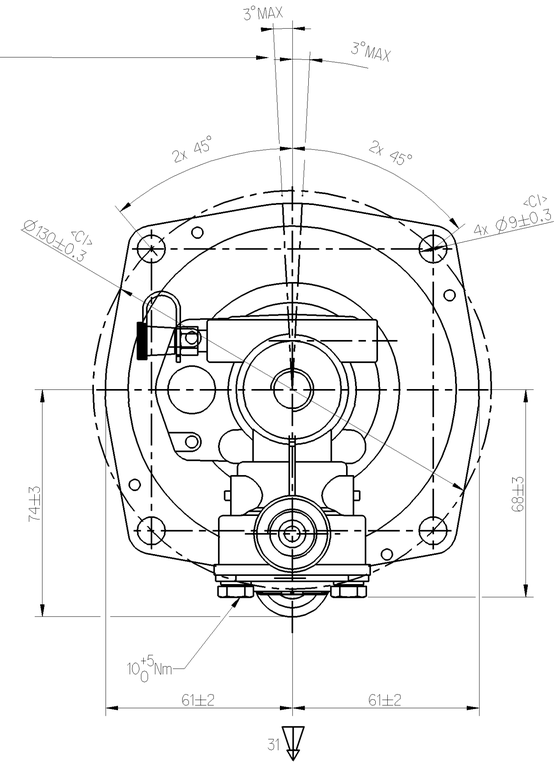

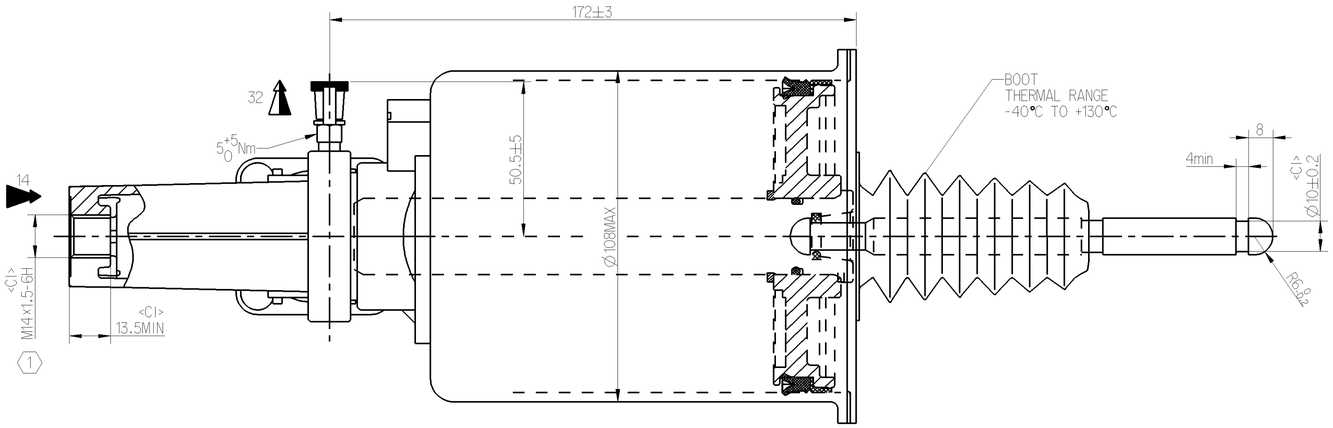

TECHNICAL INFORMATION:

1.HYDRAULIC TANK DIAMETER : Ø25mm
2.AIR TANK DIAMETER : Ø102mm;
3.HYDRAULIC WORKING PRESSURE : 4MPa
4.HYDRAULIC WORKING PRESSURE : 12MPa MAX
5.AIR WORKING PRESSURE : 1MPa MAX
6.WORKING TEMPERATURE : -40°C TO +80°C
7.MEDIUM : BRAKE OIL,AIR

(1) TORQUE 25Nm MAX

(2) TORQUE 34Nm MAX

SCHEMATIC DIAGRAM

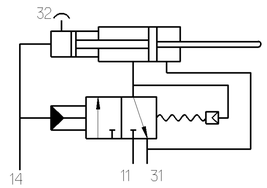

MARKING OF PORTS
11-AIR INLET
14-OIL INLET
31-AIR EXHAUST
32-BLEED SCREW

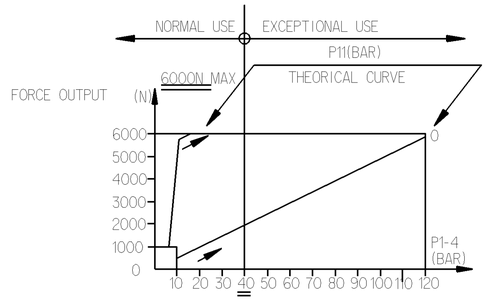

NAME PLATE DETAILS

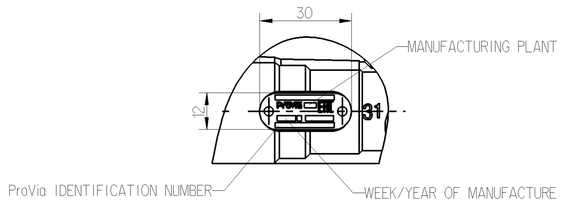

General Specification: JED-334-1 , Size ISO 14405 LP					
Further Technical Data: PRO 411 017 0					
Doc. Code: 035			Sheet: 1 To 5		
General Tolerances JED-261					
Class 1)	Range of Nominal Dimensions (± mm) ≤ 50	> 50 ≤ 180	> 180 ≤ 400	> 400	<1>
Fine	0.5	1.0	1.5	2.0	±3°
Medium X	1.0	2.0	3.0	4.0	
Coarse	2.0	3.5	5.0	6.5	
Tapped Holes acc. -					
1) Tolerance Class Applied Crossmarked					

Copyright WABCO®

Date	Signature
Drawn 2021-08-04	M.P.
Checked 2021-08-10	Yerahachelvan
Expert	Thomas Bilsing

ProVia

CLUTCH SERVO

Mass	Scale	Material No.	Date of first issue: 2021-08-10		
2.8 KG	NTS	PRO 411 010 0	Doc.Code 005	Language EN	Sheet 1/1
Size A 1	CAD System CREO	ECN-No. -	Revision - -	Techn. Resp. 5630_AM	Replacement for -

100mm

Toute Communication ou reproduction de ce document, toute exploitation ou communication de son contenu sont interdites, sauf autorisation écrite préalable. Ce document est susceptible de constituer un élément de brevet, un modèle de dessin ou modèle, un dessin ou modèle non enregistrés et/ou un droit d'auteur. Tous droits de propriété industrielle réservés, notamment en matière de brevets et de modèles.

Weitergabe sowie Vervielfältigung dieser Unterlage, Verwertung und Mitteilung ihres Inhalts nicht gestattet, soweit nicht ausdrücklich bewilligt. Diese Unterlage kann Geschmacksmuster, Gebrauchsmuster und/oder Urheberrechte und/oder Schutzrechte enthalten. Alle Rechte für den Fall der Patenterteilung oder Gebrauchsmustereintragung vorbehalten.

Vietato il permesso consegnare a terzi o riprodurre questo documento, né utilizzare il contenuto o renderlo comunque noto a terzi senza esplicita autorizzazione. Questo documento può costituire un elemento di brevetto, un modello di disegno o modello, un disegno o un modello non registrati e/o un diritto d'autore. Tutti i diritti derivanti da brevetti o modelli.

Copying of this document and giving it to others and the use or communication of the contents thereof, are forbidden without express authority. Offenders are liable to the payment of damages. All rights are reserved in the event of the grant of a patent or registration of a utility model or design. The document is the subject of copyright.