<1> SAFETY CHARACTERISTICS	0
<2> SIGNIFICANT CHARACTERISTICS	0
<CI> CUSTOMER INTERFACE	6

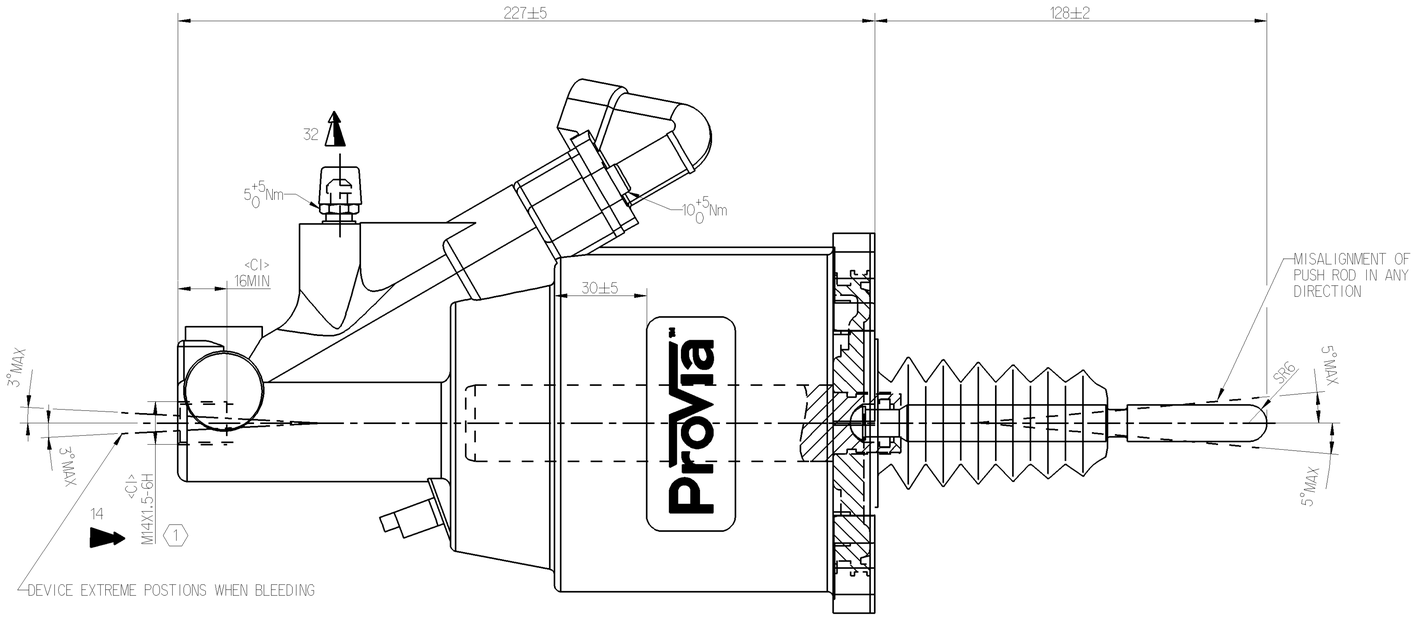

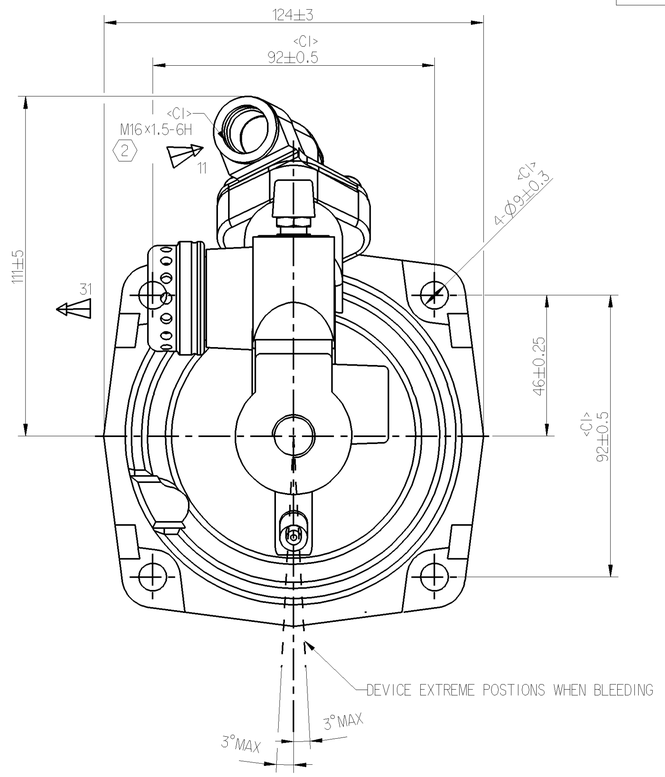

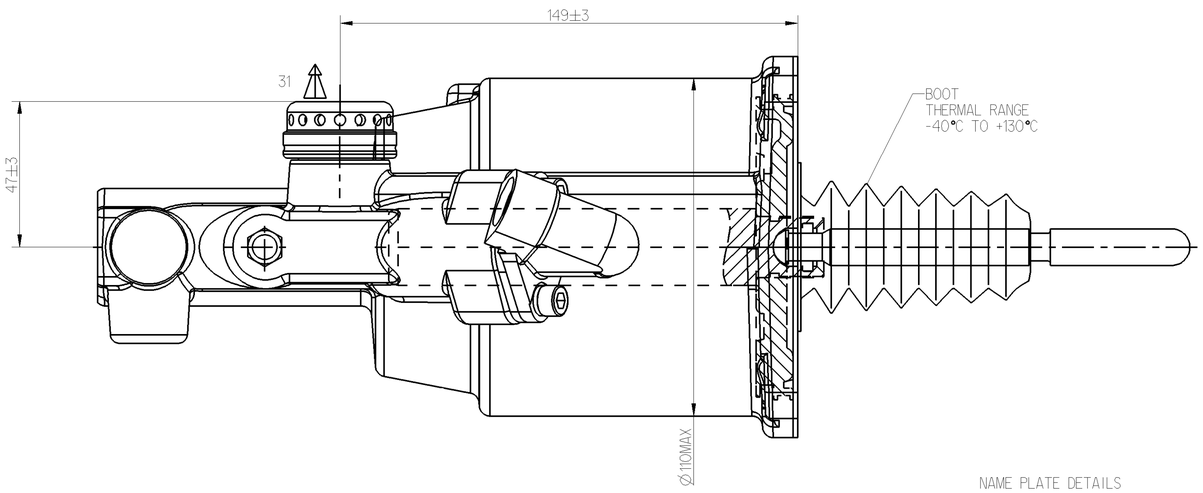

TECHNICAL INFORMATION:

1.HYDRAULIC TANK DIAMETER : Ø25mm
2.AIR TANK DIAMETER : Ø100mm;
3.HYDRAULIC WORKING PRESSURE : 4MPa
4.HYDRAULIC WORKING PRESSURE : 12MPa MAX
5.AIR WORKING PRESSURE : 1MPa MAX
6.WORKING TEMPERATURE : -40°C TO +80°C
7.MEDIUM : BRAKE OIL,AIR
8.WORKING STROKE : MAX 77mm

1 TORQUE 25Nm MAX

2 TORQUE 34Nm MAX

SCHEMATIC DIAGRAM

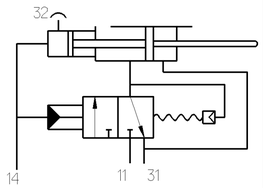

MARKING OF PORTS
11-AIR INLET
14-OIL INLET
31-AIR EXHAUST
32-BLEED SCREW

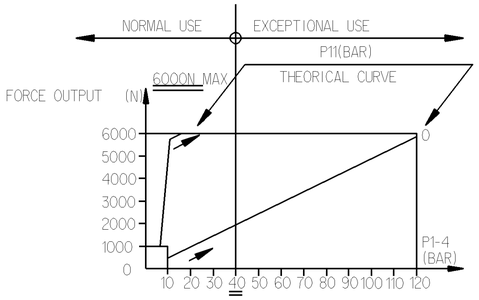

NAME PLATE DETAILS

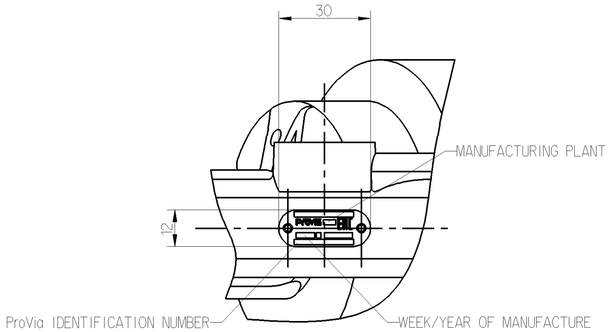

General Specification: JED-334-1 , Size ISO 14405 LP						
Further Technical Data: PRO 411 017 0						
Doc. Code: 035			Sheet: 1 To 5			
General Tolerances JED-261						
		Range of Nominal Dimensions (± mm)				
Class 1)		≤ 50	> 50 ≤ 180	> 180 ≤ 400	> 400	∢
Fine		0.5	1.0	1.5	2.0	±3°
Medium	X	1.0	2.0	3.0	4.0	
Coarse		2.0	3.5	5.0	6.5	
Tapped Holes acc. -						
1) Tolerance Class Applied Crossmarked						

Copyright WABCO®

Date	Signature
Drawn 2021-08-16	M.P.
Checked 2021-08-17	Yerahachelivan
Expert	Thomas Bilsing

ProVia

CLUTCH SERVO

Mass	Scale	Material No.	Date of first issue: 2021-08-17		
2.7 KG	NTS	PRO 411 018 0	Doc.Code 005	Language EN	Sheet 1/1
Size A 1	CAD System CREO		ECN-No. -	Revision -	Techn. Resp. 5630_AM
			Replacement for -		

100mm

Toute Communication ou reproduction de ce document, toute exploitation ou communication de son contenu sont interdites, sauf autorisation écrite. Tous droits de propriété industrielle réservés, notamment en matière de brevets et de modèles.

Weitergabe sowie Verwertung dieser Unterlage, Verwertung und Mitteilung ihres Inhalts nicht gestattet, soweit nicht ausdrücklich zugestanden. Zuwiderhandlungen verpflichten zu Schadensersatz. Alle Rechte für den Fall der Patenterteilung oder Gebrauchsmustereintragung vorbehalten.

Non è permesso consegnare a terzi o riprodurre questo documento, né utilizzare il contenuto o rendere comunque noto a terzi in pregiudizio. Tutti i diritti di proprietà industriale sono riservati, in particolare quelli di brevetto o di modello.

Copying of this document and giving it to others and the use or communication of the contents thereof, are forbidden without express authority. Offenders are liable to the payment of damages. All rights are reserved in the event of the grant of patent or registration of a utility model or design. This document is the subject of copyright.