<1> SAFETY CHARACTERISTICS	0
<2> SIGNIFICANT CHARACTERISTICS	0
<CI> CUSTOMER INTERFACE	2

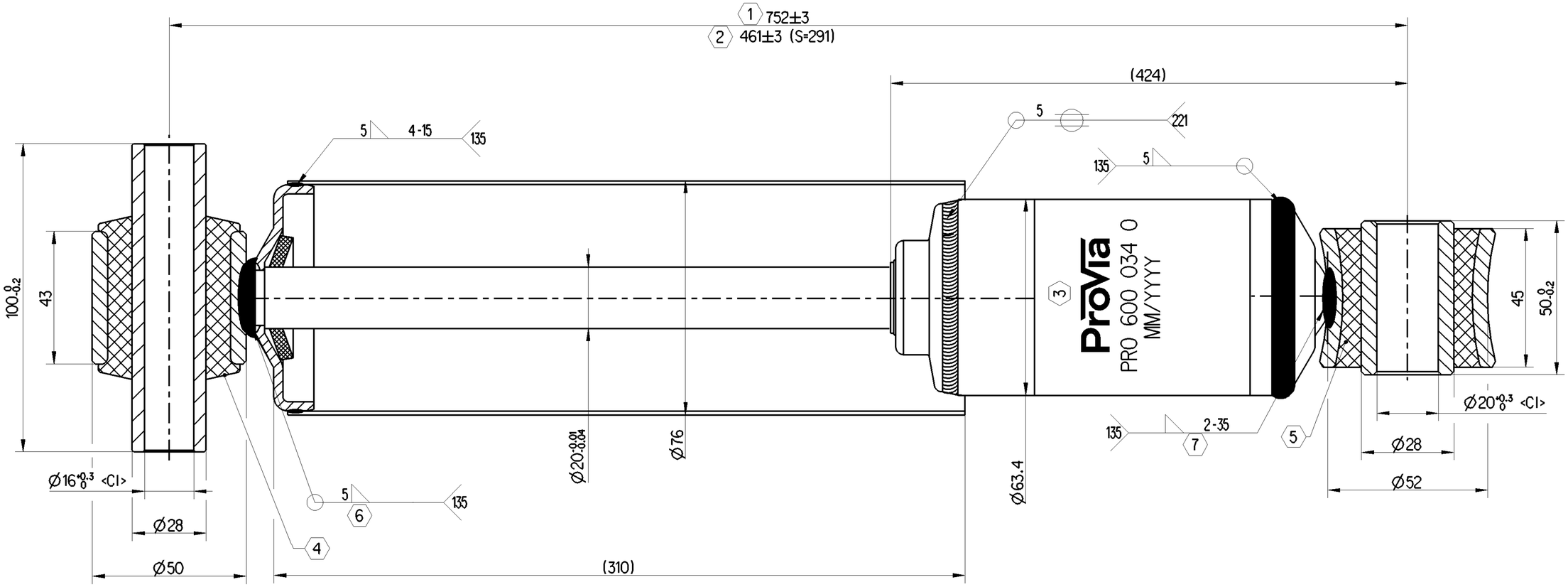

1	MAX.REBOUND LENGTH
2	MIN.COMPRESSION LENGTH
3	MARKING DETAILS PROVIA LOGO PROVIA PART NUMBER DATE OF MANUFACTURING
4	HARDNESS OF RUBBER PARTS 65-70 HS
5	HARDNESS OF RUBBER PARTS 60-70 HS
6	WELD STRENGTH 60KN
7	WELD STRENGTH 55KN
	COLOUR: RAL 9005B SEMI-BLACK

Resistance force table of SAMPLE criterion - HYDRAULIC

V (m/s)	0.052	0.131	0.262	0.393	0.524
Rebound (N)	1838	5526/9212	8364	8919	8058/10902
Compression (N)	1005	1142/1904	1748	1953	1851/2505
S (mm)	100				

General Specification: ISO 8015, JED-334-1, Size ISO 14405 LP

Further Technical Data: PRO 600 018 0

Doc. Code: 035 | Sheet: 1 To 7

General Tolerances JED-261

Class 1)		Range of Nominal Dimensions (± mm) ≤ 50	> 50 ≤ 180	> 180 ≤ 400	> 400	∢
Fine		±0.5	±1	±1.5	±2	±3°
Medium	X	±1	±2	±3	±4	
Coarse		±2	±3.5	±5	±6.5	

Tapped Holes acc. -

1) Tolerance Class Applied Crossmarked

Copyright WABCO®

	Date	Signature
Drawn	2023-01-17	Saravanan
Checked	2023-01-17	Manivannan

Dimensions in mm

ProVia

SHOCK ABSORBER

Mass	Scale	Material No.	Date of first issue: 2023-01-17
5.3±1 kg	1:1	PRO 600 034 0	Doc.Code 005 / Language EN / Sheet 1/1
Size A 2	CAD System CREO	ECN-No. - / Revision - - / Techn. Resp. 6961_AM	Replacement for -

100mm

Non è permesso consegnare a terzi o riprodurre questo documento, ne utilizzarne il contenuto o renderlo comunque noto a terzi senza autorizzazione esplicita. Ogni infrazione costituirà un evidente abuso e comporterà il risarcimento dei danni subiti. E'fatta riserva di tutti i diritti derivanti da brevetti o modelli.

Copying of this document and giving it to others and the use or communication of the contents thereof, are forbidden without express authority. Contravention of this restriction will constitute an evident abuse and result in a liability to the payment of damages. All rights are reserved in the event of the grant of patent or registration of a utility model or design. This document is the subject of copyright.

Toute Communication ou reproduction de ce document, toute exploitation ou communication de son contenu sont interdites, sauf autorisation expresse. Tout manquement à cette règle constitue un abus évident et expose son auteur au versement de dommages et interêts. Tous droits de propriété industrielle réservés, notamment en matière de brevets et de modèles.

Weitergabe sowie Vervielfältigung dieser Unterlage, Verwertung und Mitteilung ihres Inhalts nicht gestattet, soweit nicht ausdrücklich zugestanden. Zuwiderhandlungen stellen einen offensichtlichen Mißbrauch dar und verpflichten zu Schadenersatz. Alle Rechte für den Fall der Patenterteilung oder Gebrauchsmuster-Eintragung vorbehalten.