<1>	SAFETY CHARACTERISTICS	0
<2>	SIGNIFICANT CHARACTERISTICS	0
<CI>	CUSTOMER INTERFACE	2

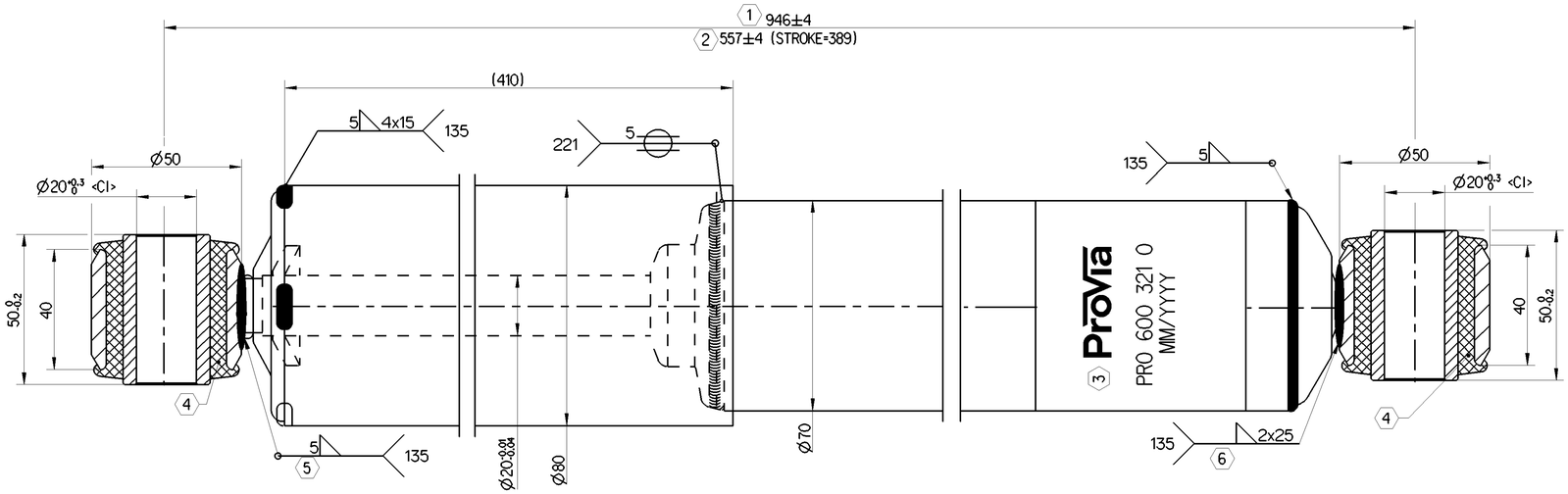

1	MAX.REBOUND LENGTH
2	MIN.COMPRESSION LENGTH
3	MARKING DETAILS PROVIA LOGO PROVIA PART NUMBER DATE OF MANUFACTURING
4	HARDNESS OF RUBBER PARTS 60-70 HS
5	WELD STRENGTH 60KN
6	WELD STRENGTH 55kN
	COLOUR: RAL 9005B SEMI-BLACK

⚠ Damping force specification-HYDRAULIC

V (m/s)	0.079	0.157	0.314	0.520
Rebound (N)	3280	6190	10250	14080
Compression (N)	860	1230	1975	2955
S(mm)	60		Reb (N)	

General Specification: ISO 8015, JED-334-1, Size ISO 14405 LP
Further Technical Data: PRO 601 066 0
Doc. Code: 035 Sheet: 1 To 6

General Tolerances JED-261

Class 1)		Range of Nominal Dimensions (± mm) ≤ 50	> 50 ≤ 180	> 180 ≤ 400	> 400	∠
Fine		±0.5	±1	±1.5	±2	±3°
Medium	X	±1	±2	±3	±4	
Coarse		±2	±3.5	±5	±6.5	

Topped Holes acc. -
1) Tolerance Class Applied Crossmarked

Copyright WABCO®

Date	Signature
Drawn 2023-03-30	Saravanan
Checked 2023-04-17	Manivannan

Dimensions in mm

ProVia

SHOCK ABSORBER

Mass	Scale	Material No.	Date of first issue: 2022-11-04		
7.3 kg	1:1	PRO 600 321 0	Doc.Code 005	Language EN	Sheet 1/1
Size A 1	CAD System CREO	ECN-No. 513729	Revision 1x A	Techn. Resp. 6961_AM	Replacement for -

100mm

Tutte Comunicazioni o riproduzione di questo documento, tutte esploitazione o comunicazione di son contenu sont interdites, sauf autorisation écrite. Tous droits de propriété industrielle réservés, notamment en matière de brevets et de modèles.

Weitergabe sowie Vervielfältigung dieser Unterlage, Verwertung und Mitteilung ihres Inhalts nicht gestattet, soweit nicht ausdrücklich bestätigt. Gewerbliche Schutzrechte vorbehalten, insbesondere für Patent- und Gebrauchsmustereintragungen.

Non è permesso consegnare a terzi o riprodurre questo documento, né utilizzare il contenuto o renderlo comunque noto a terzi senza esplicita autorizzazione. Ogni proprietà industriale è riservata, in particolare quella di brevetto o modello.

Copying of this document and giving it to others and the use or communication of the contents thereof, are forbidden without express authority. Offenders are liable to the payment of damages. All rights are reserved in the event of the grant of patent or registration of a utility model or design. This document is the subject of copyright.