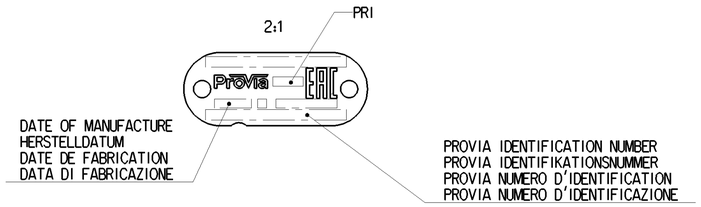

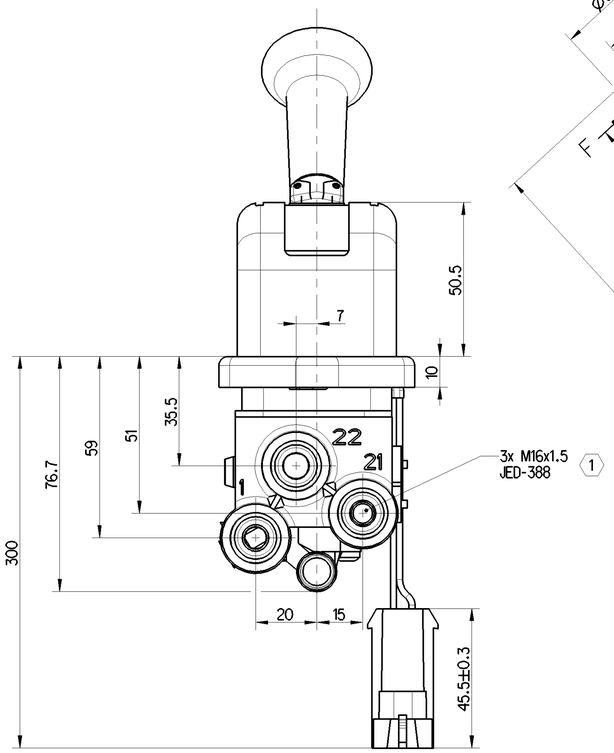

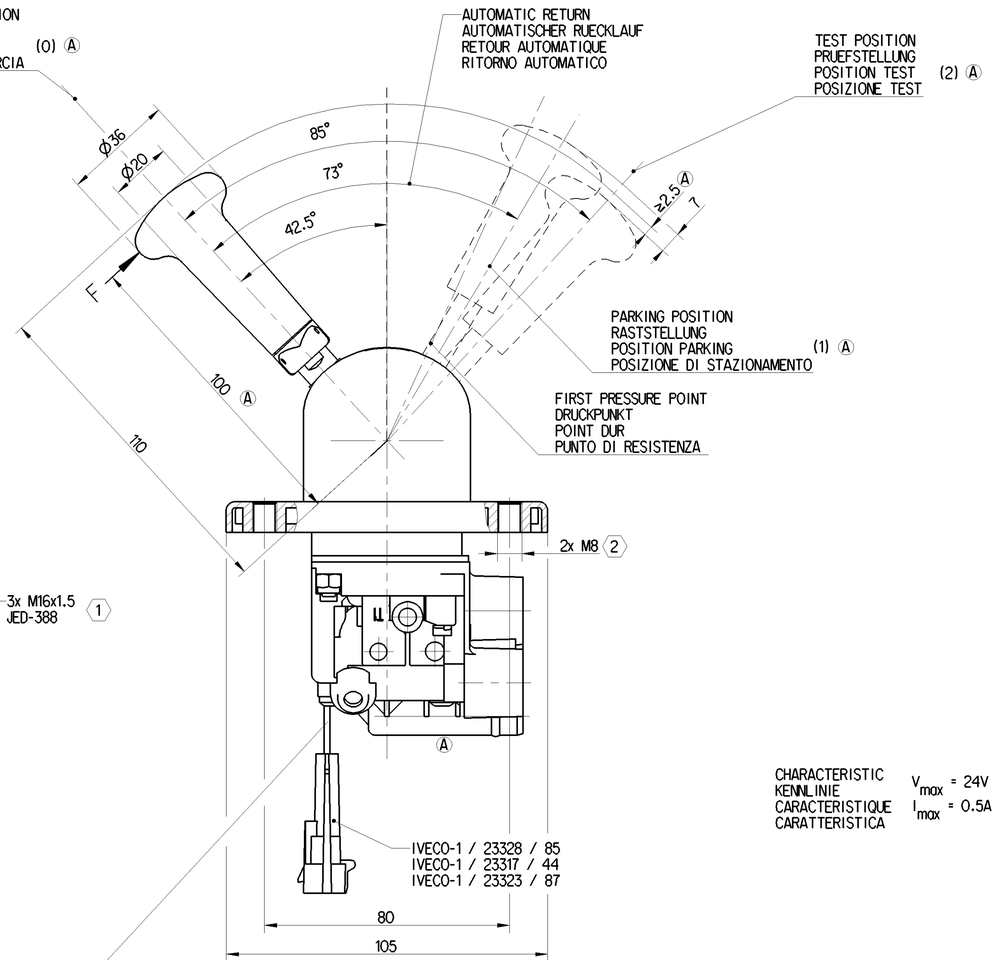

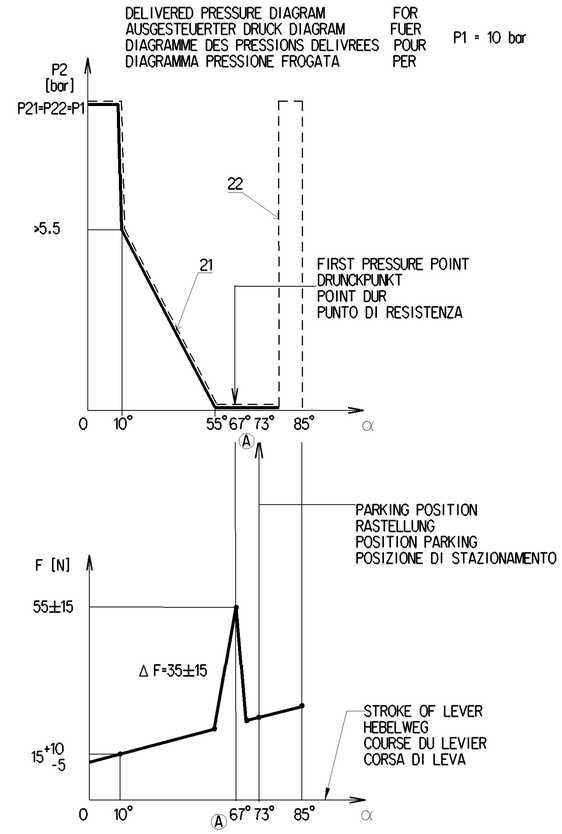

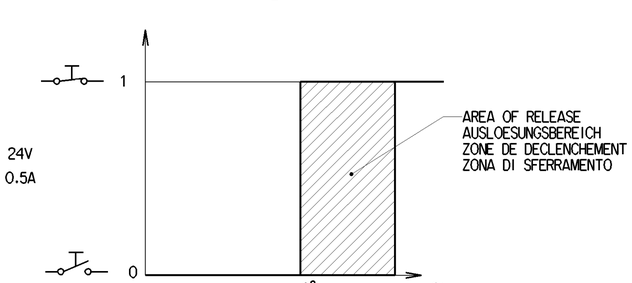

CHARACTERISTIC
KENNLINIE
CARACTERISTIQUE
CARATTERISTICA

V_{max} = 24V
I_{max} = 0.5A

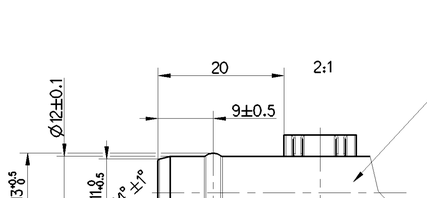

A 11 DIN 74 325

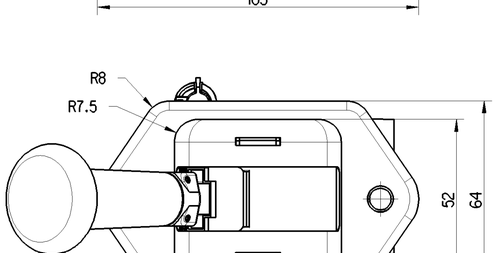

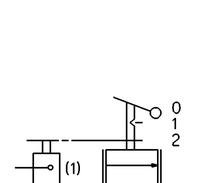

TESTING SCHEME
SYMBOL
SCHEMA DE PRINCIPE
SCHEMA DI PRINCIPIO

3 THE LOCKING DEVICE MUST AUTOMATICALLY AND SAFELY LOCK THE HANDLE IN THE PARKING POSITION
DIE VERRASTUNG MUSS DEN HEBEL AUTOMATISCH UND SICHER IN DER PARKPOSITION HALTEN
LA BUTEE DOIT VERROUILLER AUTOMATIQUEMENT ET DE FACON SECURISEE LA POIGNEE EN POSITION PARKIN
IL DISPOSITIVO DI CHIUSURA DEVE AUTOMATICAMENTE BLOCCARE IN MODO SICURO LA MANIGLIA NELLA POSIZIONE DI PARCHEGGIO

MEDIUM MEDIUM FLUIDE FLUIDO	AIR LUFT AIR AIRIA
THERMICAL RANGE THERMISCHER ANWENDUNGSBEREICH TEMPERATURE D'UTILISATION TEMPERATURA DI UTILIZZAZIONE	-40°C - +80°C
OPERATING PRESSURE: BETRIEBSDRUCK: PRESSION DE SERVICE: PRESSIONE OPERATIVA:	A 5.5 - 11 bar
SUPPLY PRESSURE VORRATSDRUCK PRESSION PNEUMATIQUE D'ALIMENTATION PRESSIONE PNEUMATICA DI ALIMENTAZIONE	MAX. P1=11 bar

1	SUPPLY VORRAT ALIMENTATION ALIMENTAZIONE
21	SPRING BRAKE CYLINDER FEDERSPEICHERZYLINDER CYLINDRE A RESSORT CILINDRO A MOLLA
22	TRAILER CONTROL VALVE ANHAENGER STEUERVENTIL VALVE DE CONTROLE DE REMCRQUE VALVOLA DI CONTROLL DI RIMORCHIO
3	EXAUST ENTLUEFTUNG ECHAPPEMENT SCARICO

	TORQUE
1	MAX. 34 Nm
2	MAX. 10 Nm

General Specification: JED-334-1 , Size ISO 14405 LP
Further Technical Data: Product Specification
Doc. Code: 035 Sheet: 1 To 5
General Tolerances JED-261

Class 1)	Range of Nominal Dimensions (± mm) ≤ 50	> 50 ≤ 180	> 180 ≤ 400	> 400	∢
Fine	0.5	1.0	1.5	2.0	±3°
Medium	1.0	2.0	3.0	4.0	
Coarse X	2.0	3.5	5.0	6.5	

Tapped Holes acc. JED-388
1) Tolerance Class Applied Crossmarked

Copyright WABCO®

Date	Signature
Drawn 2019-03-05	Bodowski
Checked 2019-03-05	Powlowski
Expert Bodowski	

ProVia

HAND BRAKE VALVE
HANDBREMSVENTIL
ROBINET DE FREINAGE A MAIN
ROBINETTO DI COMMANDO A MAN

Mass	Scale	Material No.	Date of first issue: 2019-02-01
0.8 KG	1:1 (2:1)	PRO 645 006 0	Doc.Code 005 / Language ML / Sheet 1/1
Size A 1	CAD System CREO	ECN-No. - / Revision 9x A / Techn. Resp. 5212_AM	Replacement for -

100mm

Toute Communication ou reproduction de ce document, toute exploitation ou communication de son contenu sont interdites, sauf autorisation écrite préalable. Tous droits de propriété industrielle réservés, notamment en matière de brevets et de modèles.
Weitergabe sowie Vervielfältigung dieser Unterlage, Verwertung und Mitteilung ihres Inhalts sind gestattet, soweit nicht durch schriftliche Sondervereinbarung untersagt. Alle Rechte für Schutzrechtsanmeldungen bleiben hiervon unberührt.
Non è permesso consegnare a terzi o riprodurre questo documento, né utilizzare il contenuto o renderlo comunque noto a terzi senza autorizzazione scritta. Ci riserviamo ogni diritto di proprietà industriale anche per quanto riguarda brevetti e modelli.
Copying of this document and giving it to others and the use or communication of the contents thereof, are forbidden without express authority. Offenders are liable to the payment of damages. All rights are reserved in the event of the grant of patent or registration of a utility model or design. This document is the subject of copyright.

Doc. PRO645006_005 / Version 1 / Date: 2019-02-01 / Template: A1_WABCO_Drawing_Frame_001