EXTERNAL SURFACE	
I	ELECTRO-PAINTING
II	ZINC PLATED WITH CRG+ FREE
III	HARD POLYETHYLENE
IV	STICKER

<!> SAFETY CHARACTERISTICS	0
<2> SIGNIFICANT CHARACTERISTICS	0
<CI> CUSTOMER INTERFACE	4

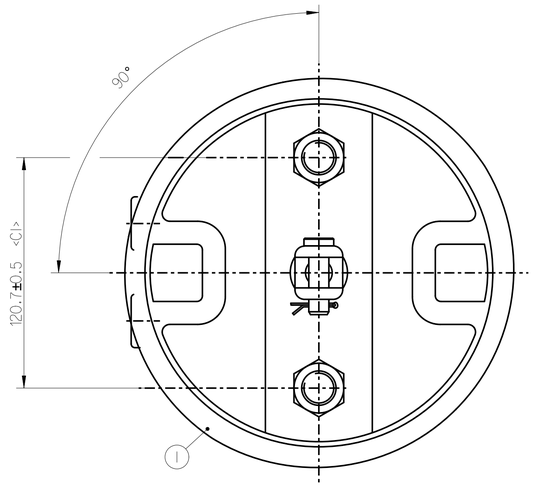

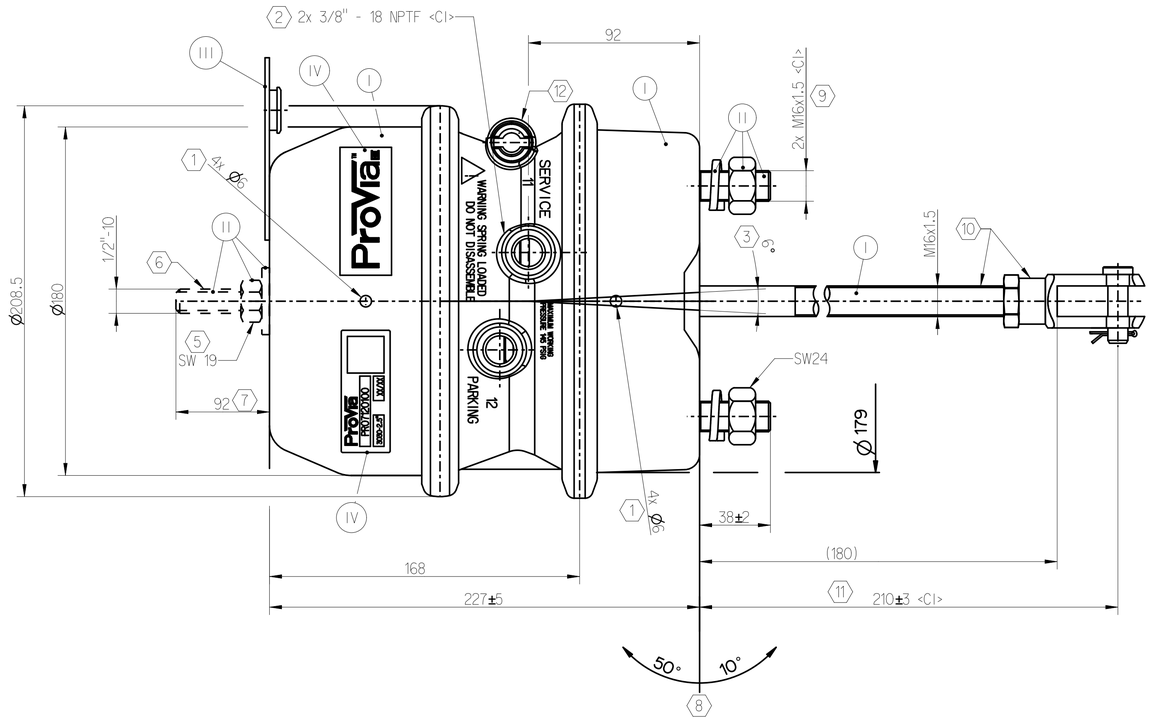

TECHNICAL REQUIREMENT

1. STROKE
   PARKING CHAMBER ≥ 63.5 mm (2.5")
   SERVICE CHAMBER ≥ 63.5 mm (2.5")
2. WORKING PRESSURE :8 Bar
   MAX. WORKING PRESSURE : 10 Bar
3. WORKING TEMPERATURE: -40°C.....+80°C (-40°F.....+176°F)
4. THE DRAWING IS AT CAGED CONDITION. THE PARKING CHAMBER WILL BE AT UNCAGED CONDITION DURING SHIPMENT. 1
5. MINIMUM PRESSURE RESPONSE AT 5mm ≤ 0.34 Bar

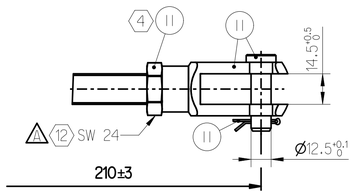

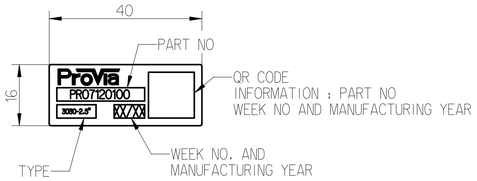

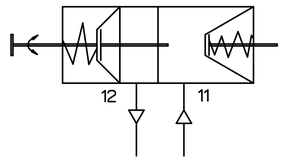

CIRCUIT DIAGRAM

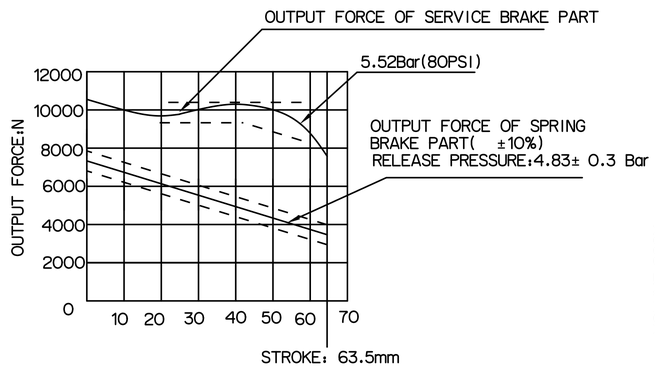

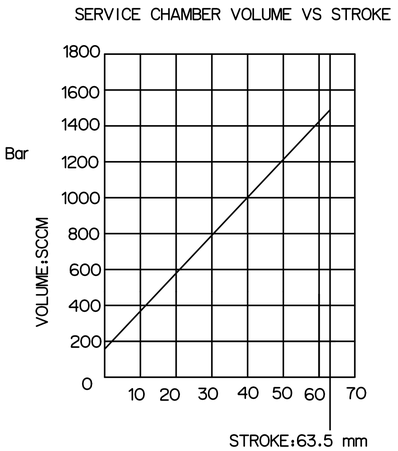

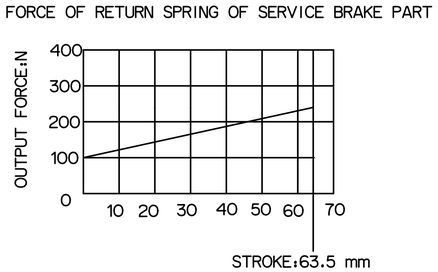

GRAPHS FOR INFORMATION ONLY

NOTES

1. OPEN BREATHER HOLE, DEFLECTION ANGLE ±30°
2. TORQUE: 45±5 Nm; THREAD PLUD IS INSTALLED
3. DEFLECTION: MAX 6° AT 0mm STROKE
4. TORQUE: 80±10 Nm
5. TORQUE: MAX 25 Nm
6. CONDITION AS SUPPLIED POWER SPRING IS NOT COMPRESSED
7. SIZE WHEN SPRING COMPRESSED
8. PARTIAL DEFLECTION ANGLE ALLOWED
9. TORQUE: 220±20 Nm
10. DURING DELIVERY CONDITION YOKE WILL BE ASSEMBLED WITH PUSHROD WITH LIMITED TORQUE YOKE NEED TO BE TIGHTENED WITH TORQUE OF 80±10 Nm BY CUSTOMER DURING INSTALLATION IN VEHICLE
11. STAND-OUT DIMENSION AFTER ASSEMBLING YOKE
12. TIGHTEING TORQUE: 20±5 Nm

General Specification: ISO 8015, JED-334-1, Size ISO 14405 LP
Further Technical Data: PRO 000 006 0
Doc. Code: 035 Sheet: 1 To 7
General Tolerances JED-261

Range of Nominal Dimensions (± mm)					
Class 1)	≤ 50	> 50 ≤ 180	> 180 ≤ 400	> 400	∢
Fine	±0.5	±1	±1.5	±2	
Medium X	±1	±2	±3	±4	±3°
Coarse	±2	±3.5	±5	±6.5	

Tapped Holes acc. -
1) Tolerance Class Applied Crossmarked

Copyright ZF®

Date	Signature
Drawn 2025-04-11	Kaviya
Checked 2025-04-11	Manivannan

Dimensions in mm

ProVia

DOUBLE DIAPHRAGM ACTUATOR CAM

Mass	Scale	Material No.	Date of first issue: 2025-04-11
9.1 kg	NTS	PRO 712 010 0	Doc.-Code 005 / Language EN / Sheet 1/1
Size A 1	CAD System CREO	ECN-No. - / Revision 2x A / Techn. Resp. 5420_AM	Replacement for -

100mm

Tutti i diritti riservati. Il presente documento non può essere riprodotto o diffuso a terzi senza il nostro consenso scritto. Non è permesso consegnare a terzi o riprodurre questo documento, né utilizzare il contenuto o renderlo comunque noto a terzi prima della scadenza del diritto di protezione del modello di utilità o del brevetto di design. Questo documento è di proprietà esclusiva della Zanini. Non è permesso consegnare a terzi o riprodurre questo documento, né utilizzarne il contenuto o renderlo comunque noto a terzi prima della scadenza del diritto di protezione del modello di utilità o del brevetto di design. Questo documento è di proprietà esclusiva della Zanini.

Copyright of this document and giving it to others and the use or communication of the contents thereof, are forbidden without express authority. Offenders are liable to the payment of damages. All rights are reserved in the event of the grant of patent or registration of a utility model or design. This document is the subject of copyright.

Weitergabe sowie Vervielfältigung dieser Unterlage, Verwertung und Mitteilung ihres Inhalts nicht gestattet, soweit nicht ausdrücklich zugelassen. Zuwiderhandlungen verpflichten zu Schadensersatz. Alle Rechte für den Fall der Patenterteilung oder Gebrauchsmustereintragung vorbehalten.