| S.NO | SURFACE PROTECTION |
|---|---|
| I | ZINC PLATED WITH CR6+ FREE |
| II | ELECTRO-PAINTING |
| III | DACROMET |
| IV | SURFACE OXIDIZATION |
| V | RUBBER |
| VI | STICKERS |
| VII | BLACKENING |

| | |
|---|---|
| <1> SAFETY CHARACTERISTICS | 0 |
| <2> SIGNIFICANT CHARACTERISTICS | 0 |
| <CI> CUSTOMER INTERFACE | 6 |

Z

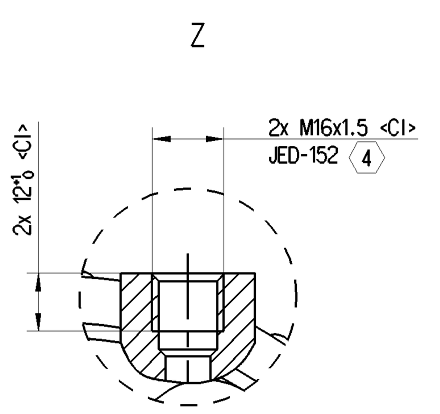


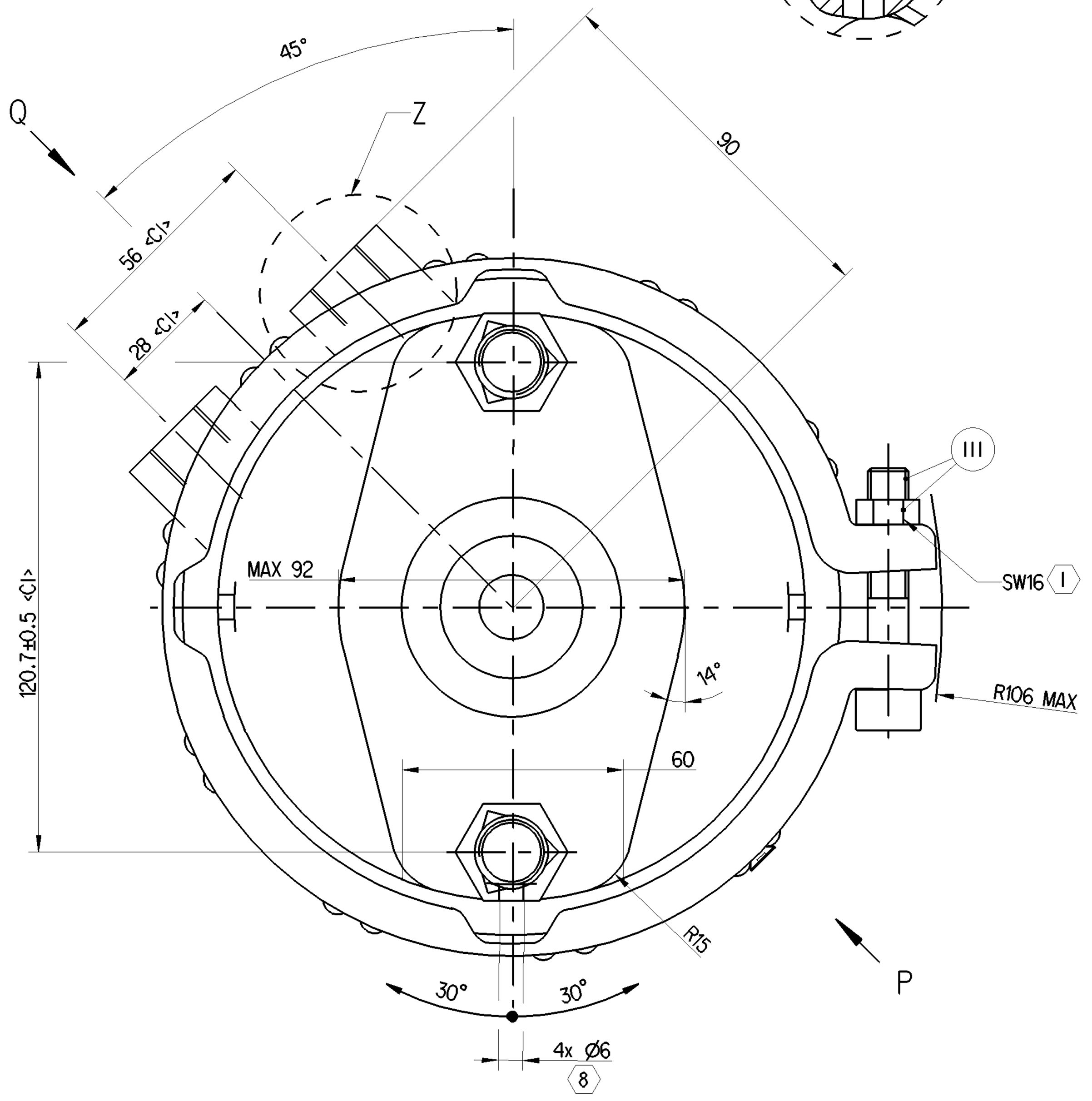


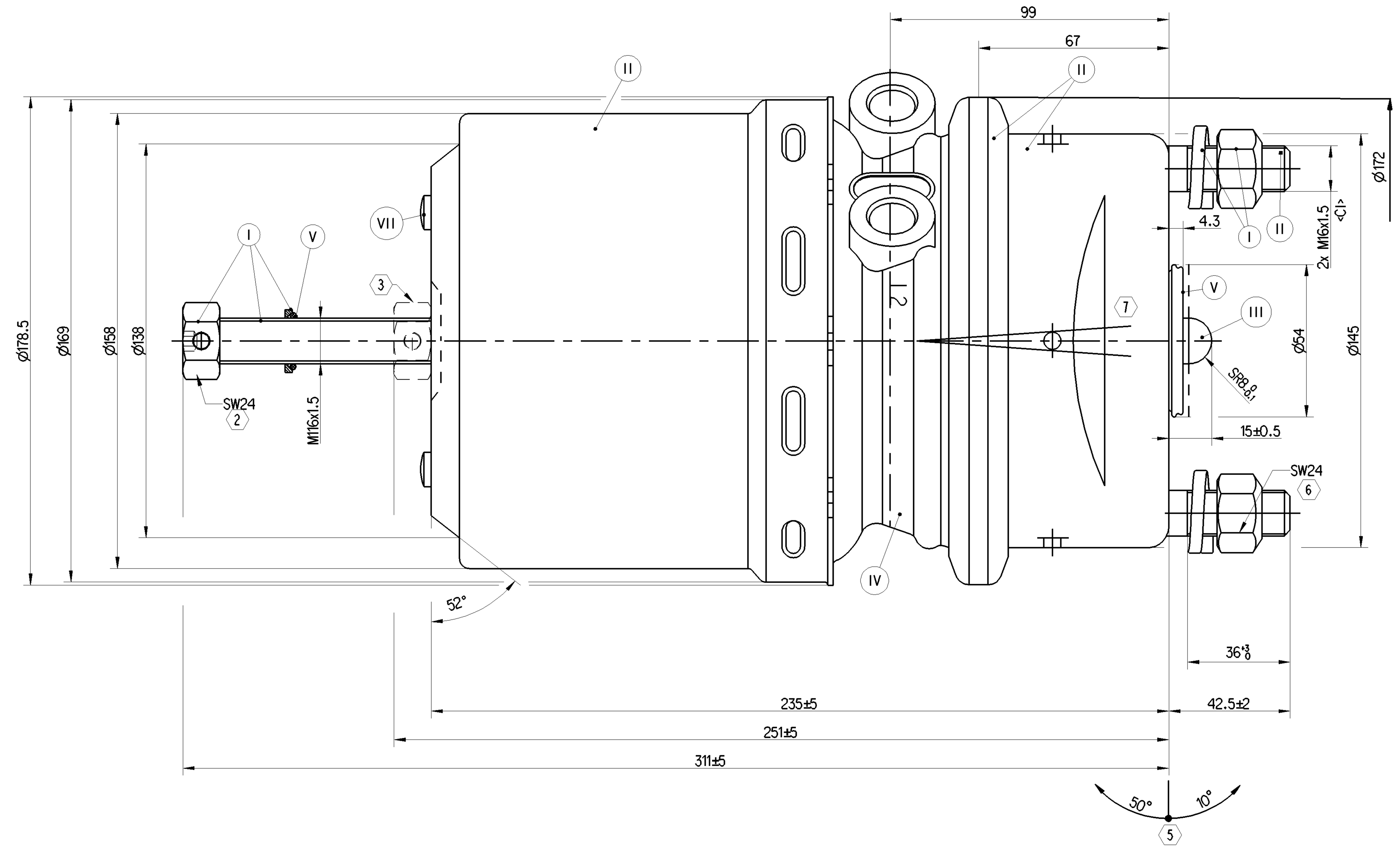


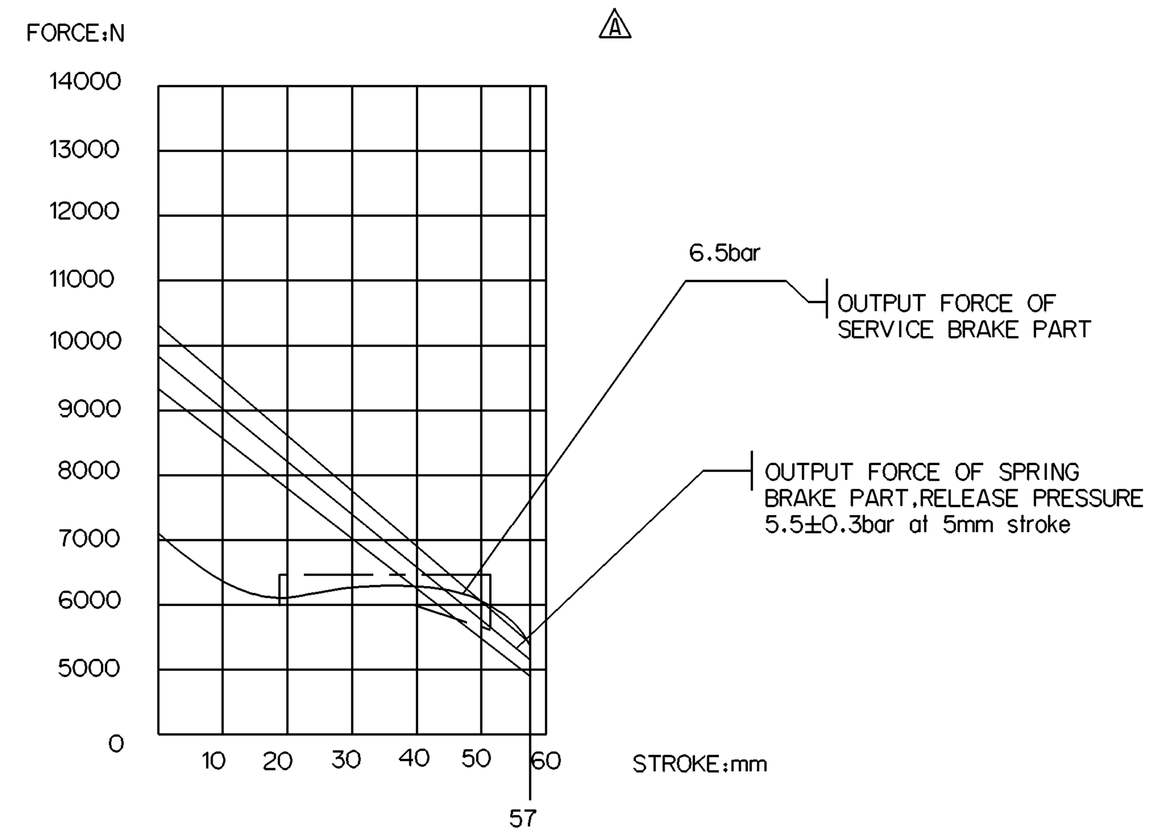


NOMINAL VALUES GIVEN FOR SERVICE SIDE, TOLERANCE BAND AS PER DIN 74060-3

NOMINAL VALUES GIVEN FOR SPRING SIDE, TOLERANCE BAND ± 5%

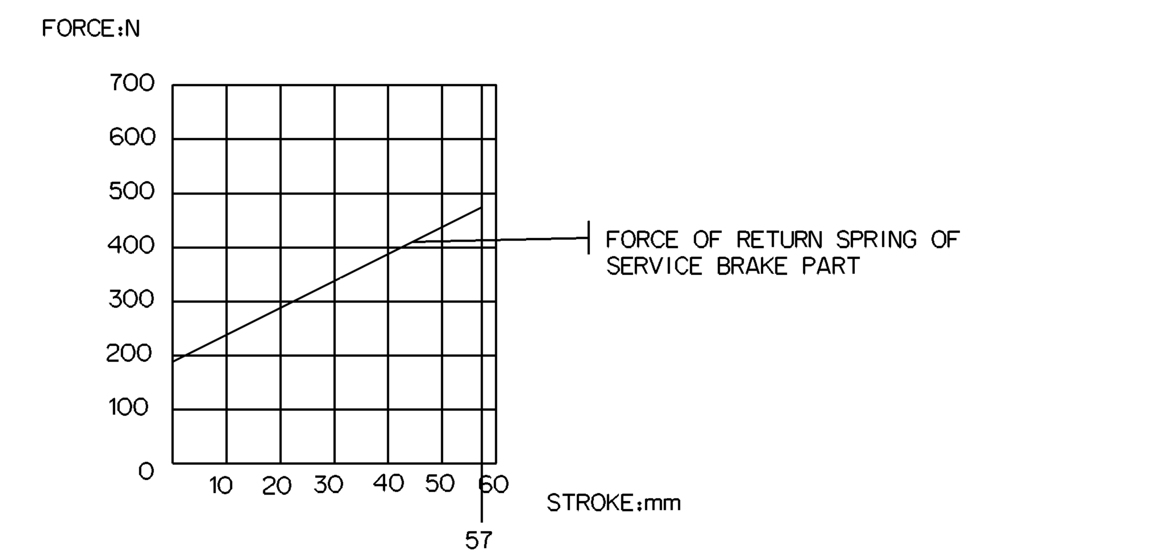


GRAPHS FOR INFORMATION ONLY

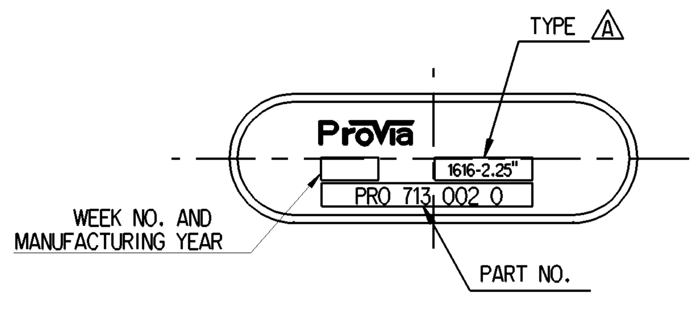


NAME PLATE

VIEW P

1. TORQUE: ≥35Nm
2. RELEASE POSITION, RELEASING WITH: 80Nm MAX.
3. DRIVING POSITION,TIGHTENING WITH: $25^{+20}_{0}$Nm
4. TORQUE: MAX.34Nm
5. ADMISSIBLE INSTALLATION POSITION
6. TORQUE: $210^{0}_{-30}$ Nm
7. DEFLECTION: 8°MAX AT STROKE:0 mm
8. TO BE INSTALLED WITH LOWER BREATHER HOLE OPEN

TECHNICAL REQUIREMENT:

1.STROKE:
SERVICE BRAKE: ≥57mm
SPRING BRAKE: ≥57mm;

2.WORKING PRESSURE:
SERVICE CHAMBER: Pmax 10.2 bar, TEMPORARILY 13 bar;
PARKING CHAMBER: Pmax 8.5 bar, TEMPORARILY 11 bar.

3.WORKING TEMPERATURE: -40℃...+80℃;(-40℉.....+176℉)

4.THE DRAWING IS AT CAGED CONDITION,THE PARKING CHAMBER WILL BE AT UNCAGED CONDITION DURING SHIPMENT.

5.WORKING MEDIUM: AIR.

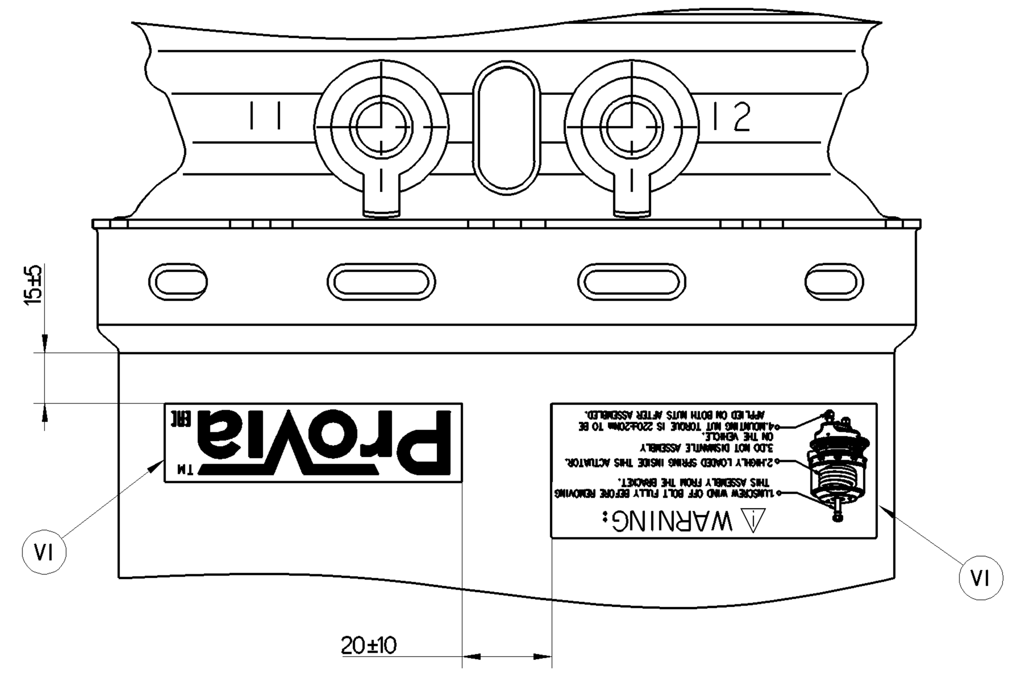


VIEW Q

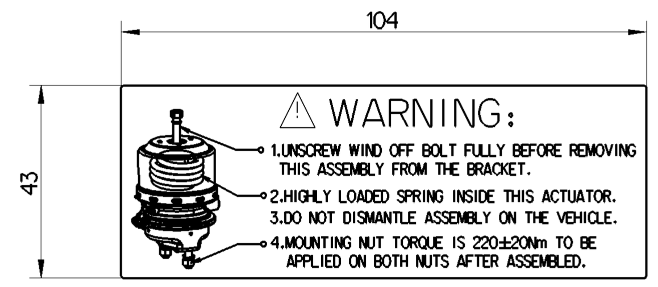


STICKER A
VI

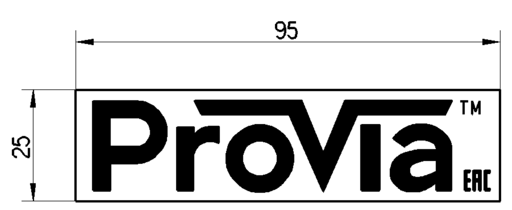


STICKER B
VI

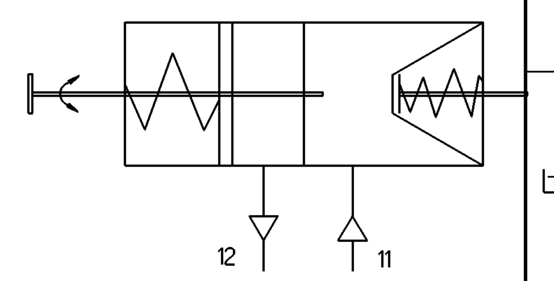


CIRCUIT DIAGRAM

| | | | | | | |
|---|---|---|---|---|---|---|
| General Specification: ISO 8015, JED-334-1, Size ISO 14405 LP | | | | | | |
| Further Technical Data: PRO 713 080 0 | | | | | | |
| Doc. Code: 035 | | | Sheet: 1 To 6 | | | |
| General Tolerances JED-261 | | | | | | |
| | | Range of Nominal Dimensions ( ± mm) | | | | |
| Class 1) | | ≤ 50 | > 50 ≤ 180 | > 180 ≤ 400 | > 400 | ∢ |
| Fine | | ±0.5 | ±1.0 | ±1.5 | ±2 | |
| Medium | X | ±1 | ±2 | ±3 | ±4 | ±3° |
| Coarse | | ±2 | ±3.5 | ±5 | ±6.5 | |
| Tapped Holes acc. JED-152 | | | | | | |
| 1) Tolerance Class Applied Crossmarked | | | | | | |

Copyright ZF®

| Date | Signature |
|---|---|
| Drawn | |
| 2023-09-20 | Vengalesh |
| Checked | |
| 2023-09-20 | Manivannan |

Dimensions in mm

ProVia

TRISTOP - BRAKE ACTUATOR

| Mass | Scale | Material No. | Date of first issue: 2020-03-16 | | |
|---|---|---|---|---|---|
| 7.4 kg | NTS | PRO 713 002 0 | Doc.Code 005 | Language EN | Sheet 1/1 |
| Size | CAD System | | | | |
| A 0 | CREO | ECN-No. 515320 | Revision 7x A | Techn. Resp. 5400_AM | Replacement for - |

100mm