| EXTERNAL SURFACE | |
|---|---|
| I | ZINC PLATED WITH CR6+ FREE |
| II | ELECTRO-COATING |
| III | DACROMET |
| IV | HARD POLYETHYLENE |
| V | RUBBER |
| VI | STICKER |

| | | |
|---|---|---|
| <1> | SAFETY CHARACTERISTICS | 0 |
| <2> | SIGNIFICANT CHARACTERISTICS | 0 |
| <CI> | CUSTOMER INTERFACE | 4 |

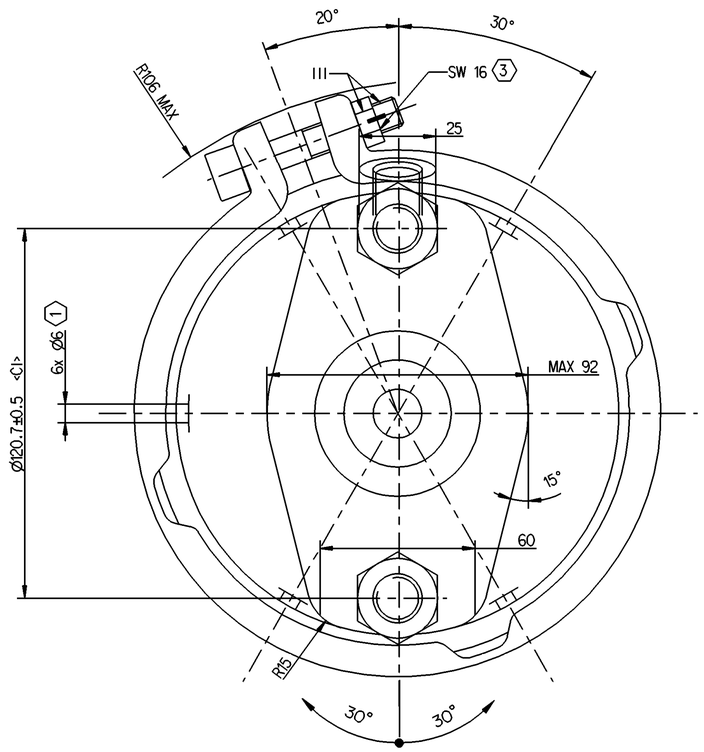


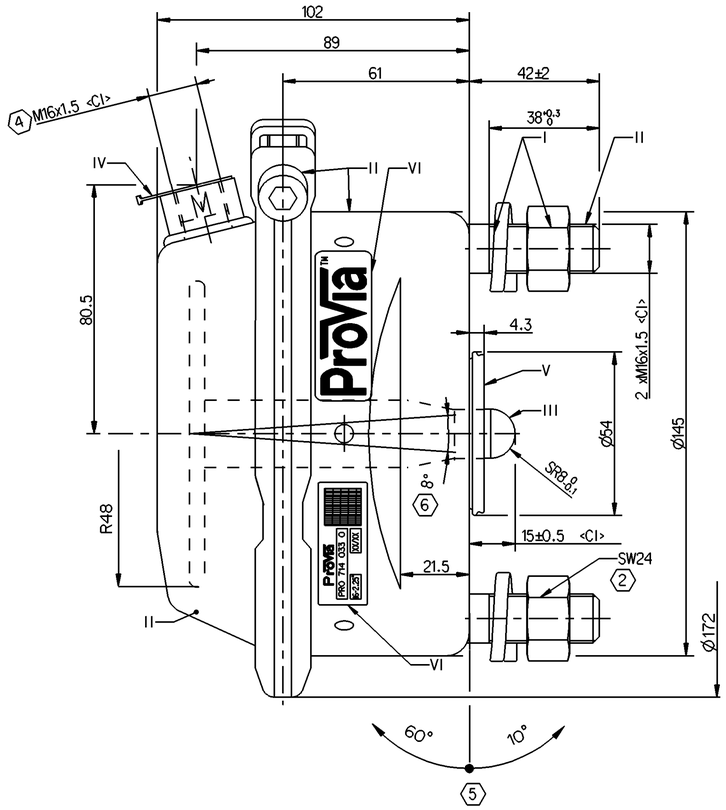


TECHNICAL REQUIREMENT:

1. STROKE: ≥ 57mm
2. WORKING PRESSURE : Pmax : 10.2 Bar, TEMPORARILY 13 Bar
3. WORKING TEMPERATURE: -40℃.....+80℃
4. WORKING MEDIUM: AIR
5. THIS PRODUCT MEETS THE REQUIREMENT OF QC/T 790 STANDARD

(1) OPEN BREATHER HOLE
(2) TORQUE: 220±20 Nm
(3) TORQUE: 35-40 Nm
(4) TORQUE: 45±5 Nm
(5) ADMISSIBLE INSTALLATION POSITION
(6) DEFLECTION: 8° MAX AT STROKE 0mm

# GRAPHS FOR INFORMATION ONLY

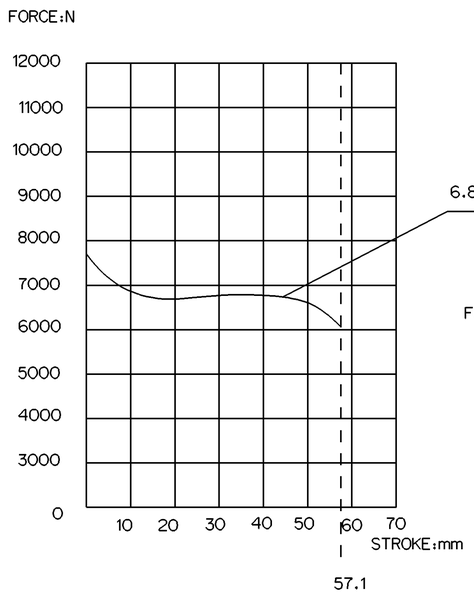


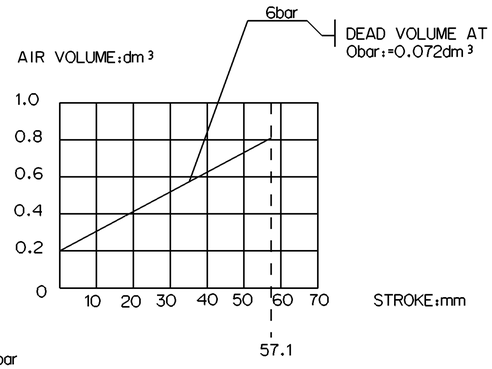


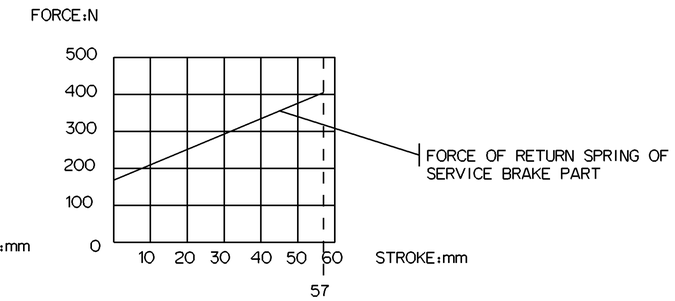


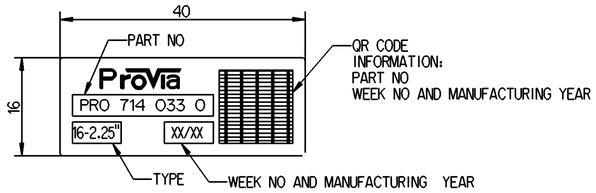


STICKER B
2:1

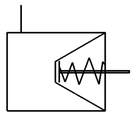

CIRCUIT DIAGRAM

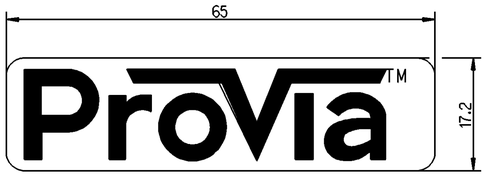


STICKER A
2:1

| | | | | | | |
|---|---|---|---|---|---|---|
| General Specification: ISO 8015, JED-334-1, Size ISO 14405 LP | | | | | | |
| Further Technical Data: PRO 714 033 0 | | | | | | |
| Doc. Code: 035 | | Sheet: 1 To 10 | | | | |
| General Tolerances JED-261 | | | | | | |
| | | Range of Nominal Dimensions ( ± mm) | | | | |
| Class 1) | | ≤ 50 | > 50 ≤ 180 | > 180 ≤ 400 | > 400 | ∢ |
| Fine | | ±0.5 | ±1 | ±1.5 | ±2 | ±3° |
| Medium | X | ±1 | ±2 | ±3 | ±4 | |
| Coarse | | ±2 | ±3.5 | ±5 | ±6.5 | |
| Tapped Holes acc. - | | | | | | |
| 1) Tolerance Class Applied Crossmarked | | | | | | |

Copyright WABCO®

| Date | Signature |
|---|---|
| Drawn 2023-04-27 | Kaviya |
| Checked 2023-04-27 | Subbiah |

Dimensions in mm

ProVia

BRAKE CHAMBER DISC 16

| Mass | Scale | Material No. | Date of first issue: 2023-04-27 |
|---|---|---|---|
| 3.3 kg | 1:1 (2:1) | PRO 714 033 0 | Doc.Code 005 / Language EN / Sheet 1/1 |
| Size A 1 | CAD System CREO | ECN-No. - / Revision - | Techn. Resp. 5350_AM / Replacement for - |

100mm

Tutte Comunicazioni o riproduzione di questo documento, tutte esplicazione o comunicazione di son contenu sont interdites, sauf pour ceux qui ont le droit de le savoir. Tous droits de propriété intellectuelle réservés, notamment en matière de brevets et de modèles.

Weitergabe sowie Vervielfältigung dieser Unterlage, Verwertung und Mitteilung ihres Inhalts nicht gestattet, soweit nicht ausdrücklich zugestanden. Zuwiderhandlungen verpflichten zu Schadenersatz. Alle Rechte für den Fall der Patent- oder Gebrauchsmustereintragung vorbehalten.

Non è permesso consegnare o farlo a terzi o riprodurre questo documento, né utilizzare il contenuto o renderlo comunque noto a terzi senza esplicita autorizzazione. Tutti i diritti derivanti da brevetti o modelli.

Copying of this document and giving it to others and the use or communication of the contents thereof, are forbidden without express authority. Offenders are liable to the payment of damages. All rights are reserved in the event of the grant of patent or registration of a utility model or design. This document is the subject of copyright.