<1>	SAFETY CHARACTERISTICS	0
<2>	SIGNIFICANT CHARACTERISTICS	0

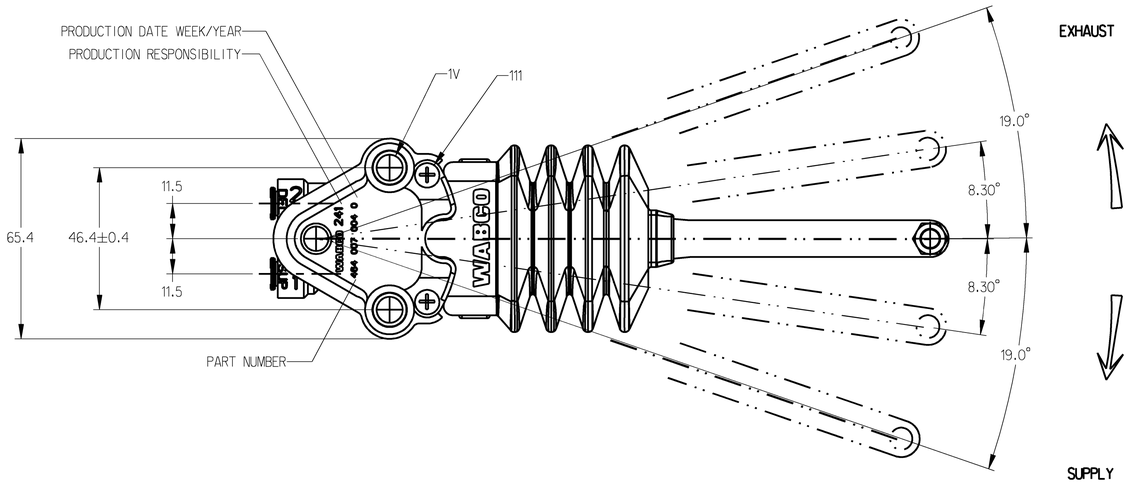

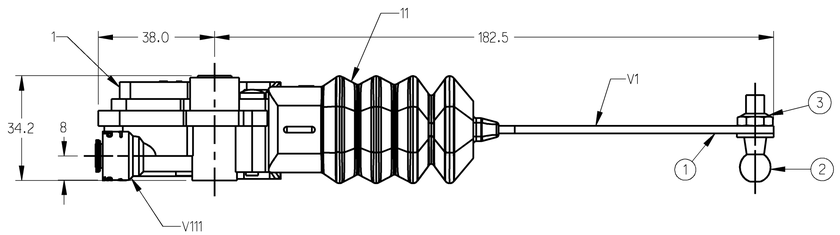

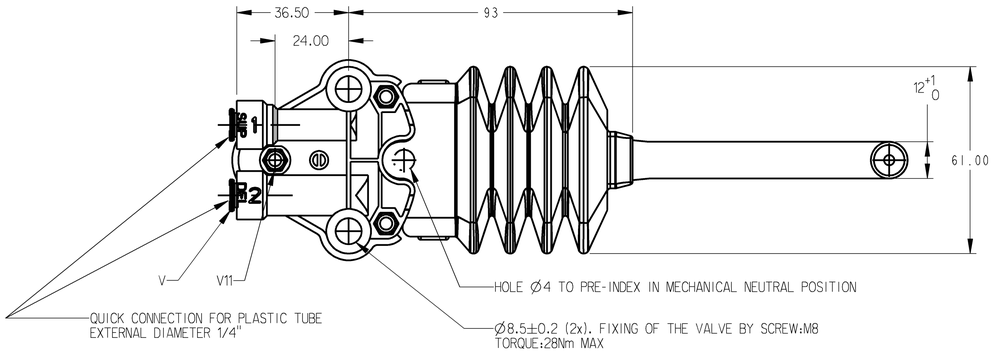

DETAIL ITEM 2

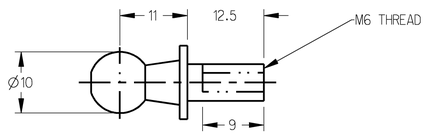

SCALE 2.0

FLOW RATE FOR : P1=8 bar and P1=11 bar

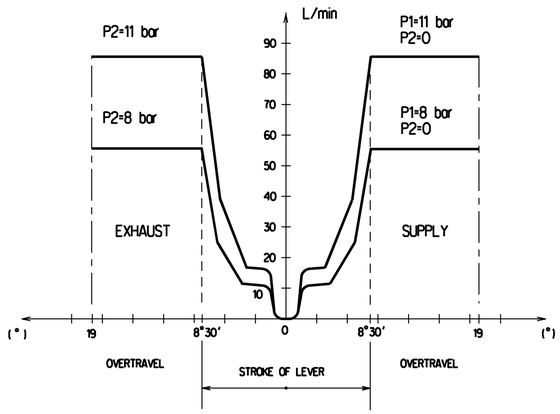

SYMBOL

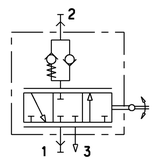

1 SUPPLY	
2 DELIVERY	
THERMAL RANGE	-40 C ... +80 C
WORKING PRESSURE	P1= 11 bar MAX.
EXCEPTIONAL INLET PRESSURE	P1= 14 bar MAX.
RESIDUAL PRESSURE	P2= 0.6 0.3 bar±

	MATERIAL	SURFACE PROTECTION
I	POM	
II	EPDM	
III	STEEL	Zn
IV	STEEL	Zn
V	PA 6.6 30GF	
VI	STEEL	Zn
VII	STEEL	Zn
VIII	POM	

3	LOCK NUT (ZINC PLATED)	1
2	10MM BALL STUD (ZINC PLATED OR EQUIV)	1
1	LEVELLING VALVE	1
ITEM	DESCRIPTION	QTY

THIRD ANGLE PROJECTION

General Specification: JED-334-0 , Size ISO 14405-1 E	
Further Technical Data:	
Doc. Code:	Sheet: To
General Tolerances JED-261	

Class 1)	Range of Nominal Dimensions (mm) ± ≤ 50	> 50 ≤ 180	> 180 ≤ 400	> 400	◁
Fine	0.5	1.0	1.5	2.0	±3°
Medium	1.0	2.0	3.0	4.0	
Coarse	2.0	3.5	5.0	6.5	
Topped Holes acc.					

1) Tolerance Class Applied Crossmarked

General Specification	JED-334-0 , Size ISO 14405 E , JED-762	Surface Protection
	-	-

Copyright WABCO®

Date	Signature
Drawn	
2019-06-05	Srinivasaperumal
Checked	
2019-06-05	Paoletti
Expert	
-	

WABCO

LEVELLING VALVE

Mass	Scale	Material No.	Date of first issue: 2014-01-13		
- KG	1:1	RWABKO11	Doc.Code	Language	Sheet
Size	CAD System		005	EN	1/1
A 1	CREO				

ECN-No.	Revision	Techn. Resp.	Replacement for
501709	1x F	5640_MW	-

100mm

Non è permesso consegnare a terzi o riprodurre questo documento, né utilizzarne il contenuto o renderlo comunque noto a terzi senza previo consenso scritto. Tutti i diritti derivanti da brevetti o da registrazioni di modelli di utilità rimangono riservati.
Copying of this document and giving it to others and the use or communication of the contents thereof, are forbidden without express authority. Offenders are liable to the payment of damages. All rights are reserved in the event of the grant of patent or registration of a utility model or design. This document is the subject of copyright.

Toute Communication ou reproduction de ce document, toute exploitation ou communication de son contenu sont interdites, sauf autorisation écrite. Tous droits de propriété industrielle réservés, notamment en matière de brevets et de modèles.
Weitergabe sowie Vervielfältigung dieser Unterlage, Verwertung und Mitteilung ihres Inhalts nicht gestattet, soweit nicht ausdrücklich zugesichert. Zuwiderhandlungen verpflichten zu Schadenersatz. Alle Rechte für Patent- bzw. Gebrauchsmustereintragung vorbehalten.