TAILGUARD™ INSTALLATION MANUAL

TECHNICAL BULLETIN

TP19007

WABCO

Table of Contents

Edition 1
Version 1 (06.2020)
TP19007 (en)

1 General Information

Symbols used in this document

⚠DANGER

Description of an immediate situation which will result in irreversible injury or death if the warning is ignored.

⚠WARNING

Description of a possible situation which may result in irreversible injury or death if the warning is ignored.

⚠CAUTION

Description of a possible situation which may result in irreversible injury if the warning is ignored.

NOTICE

Description of a possible situation which may result in material damage if the warning is ignored.

Important information, notes and/or tips

Reference to information on the internet

1. Action step
   - Action step
   ⇨ Consequence of an action

■ List
   • List

Note on the use of a tool/WABCO tool

How to Obtain Additional Maintenance, Service and Product Information

If you have any questions about the material covered in this publication, or for more information about the WABCO product line, please contact the WABCO Customer Care Center at 855-228-3203, by email at wnacustomercare@wabco-auto.com, or visit our website: www.wabco-na.com.

Refer to the latest RSS*plus* Maintenance Manual MM0888. To obtain this publication, visit our website at wabco-na.com, or call the WABCO Customer Care Center at 855-228-3203.

Refer to the Society of Automotive Engineers (SAE) website to find all current SAE documents and standards applicable to WABCO products (such as SAE J447 and SAE J908 at www.sae.org).

Refer to the National Highway Traffic Safety Administration (NHTSA) website to find all current documents referenced in the manual at www.nhtsa.gov.

WABCO TOOLBOX PLUS™ Software

The TOOLBOX PLUS™ Software provides PC diagnostics for WABCO products can be purchased and downloaded from https://wabco.snapon.com. For complete instructions for using TOOLBOX™ Software version 12, refer to the TOOLBOX™ Quick Start Guide TP99102. For TOOLBOX PLUS™ refer to User's Guide MM19047. To obtain this literature, visit www.wabco-na.com/literature.

WABCO Academy

https://www.wabco-academy.com/home/

WABCO Online product catalog

https://www.wabco-customercenter.com

Your direct contact to WABCO

WABCO North America LLC
WABCO USA LLC
1220 Pacific Drive
Auburn Hills, MI 48326
Customer Care Center: (855) 228-3203
www.wabco-na.com

2 Safety Information

Provisions for a safe work environment

- Only trained and qualified auto technicians and auto mechanics may carry out work on the vehicle.
- Read this publication carefully.
- Follow all warnings, notices and instructions to avoid personal injury and property damage.
- Always abide by the vehicle's Original Equipment Manufacturer (OEM) specifications and instructions.
- Observe all accident regulations of the respective company as well as regional and national regulations.
- The workplace should be dry, sufficiently lit and ventilated.
- Use personal protective equipment if required (safety shoes, protective goggles, respiratory protection and ear protectors).

Read and observe all Danger, Warning and Caution hazard alert messages in this publication. They provide information that can help prevent serious personal injury, damage to components, or both.

⚠WARNING

To prevent serious eye injury, always wear safe eye protection when you perform vehicle maintenance or service.

⚠WARNING

Park the vehicle on a level surface. Block the wheels to prevent the vehicle from moving. Support the vehicle with safety stands. Do not work under a vehicle supported only by jacks. Jacks can slip or fall over. Serious personal injury and damage to components can result.

⚠WARNING

This product can expose you to chemicals including Nickel, which is known to the State of California to cause cancer and birth defects or other reproductive harm. For more information, go to www.P65Warnings.ca.gov.

3 Important Information

Use only genuine WABCO components. Other manufacturers' parts are not designed for use with a WABCO ABS system and may not function correctly.

WABCO recommends that a control line filter, part number 432 500 005 0, be installed on the air system's control line, upstream of the ABS ECU/valve assembly.

4 TailGUARD™ Warnings, Cautions and Operating Guidelines

4.1 Driver-Related Information

⚠WARNING

The TailGUARD System is a driver aid only. It is designed to assist the vehicle operator in maintaining a safe rear end distance of obstacles during parking maneuvers and, if needed, provide braking to reduce the severity of a possible collision.

The TailGUARD is no substitute for the most important factor in vehicle safety, which is a safe, conscientious driver. Use of TailGUARD cannot compensate for a driver that is distracted, inattentive or impaired by fatigue, drugs or alcohol.

As always, it is the driver's responsibility to:

- Use safe driving techniques
- Exercise proper judgment for the traffic, road and weather conditions
- Maintain a safe distance to obstacles during parking maneuvers
- Apply the brakes when needed to maintain control of the vehicle

Whether TailGUARD is in use or not, the driver is responsible for the vehicle's speed, distance to obstacles and braking the vehicle, if necessary, to avoid a collision. Never wait for a TailGUARD warning before applying the brakes. Failure to do so can result in serious personal injury or death, and/or severe property damage.

⚠WARNING

The driver is responsible for understanding the operation and limitations of the TailGUARD before operating the vehicle. Failure to do so can result in serious personal injury or death, and/or severe property damage.

⚠WARNING

To reduce the risk of injuries caused during TailGUARD vehicle braking, all vehicle occupants should be correctly seated and properly belted or restrained during vehicle operation. All loose items should be secured so that they will not fly forward and cause injury during a braking event. The use of TailGUARD in vehicles not equipped with seat belts may expose non-belted passengers to injuries due to system initiated sudden vehicle braking, despite vehicle compliance with applicable safety standards.

⚠WARNING

To avoid any accidents, observe the following safety instructions for vehicles with braking intervention through TailGUARD:

- Note pulsed braking when reversing too fast:
- TailGUARD can assist only with reversing speeds below max. 5.6 mph (9 km/h).
- TailGUARD will trigger short brake pulses when a critical speed is reached to alert the driver.
- If the driver accelerates further, TailGUARD deactivates itself and outputs a fault message.
- Speed signal faults due to incorrect or unprofessional connection can significantly impair vehicle safety.

To avoid any accidents, observe the following safety instructions for operating the vehicle and as information for the driver:

- Risk of injury due to system failure in extreme weather conditions: Extreme weather conditions e.g. heavy rain or snowfall, can lead to the restricted functionality.
- Objects with very soft surfaces cannot be detected under all circumstances.
- TailGUARD is a reversing assistance system that helps the driver while reversing by alerting him to approaching objects and braking independently to prevent a collision when this becomes necessary.
- The driver, however, remains fully responsible for vehicle movement and any damage that results from operating the vehicle.
- WABCO cannot be held liable for an accident that is caused despite of using this system; this is a support system only.
- TailGUARD does not release the driver of his obligations under legal or company regulations, such as support of reversing by a person giving directions.

4.2 Environment-Related Information

⚠WARNING

- The driver should consider the benefit/risk of using TailGUARD under the following conditions.
- Weather such as rain, sleet, snow, ice. These conditions can limit the ultrasonic sensors distance sensing ability.
- Construction zones, off road, dirt roads or muddy roads with loose surface. These conditions can cause the wheels to lose traction and limit TailGUARD's ability to provide appropriate warning and adequate braking. Curvy or winding roads, roads with sharp turns.
- Curvy maneuvers can make it difficult for the TailGUARD sensors to track obstacles in its path.
- Performing parking maneuvers in these conditions with TailGUARD active can produce false warnings, unexpected braking or no response at all. Serious personal injury or death, and/or severe property damage can result.

4.3 System Malfunction Information

⚠WARNING

If the TailGUARD is not correctly identifying obstacles that are in its path, this may be due to ultrasonic sensors operational issues. Typically, these are ultrasonic sensors operational issues that can result from the following problems:

- Debris (dirt, snow, ice) on the sensor fascia. This must be removed.
- A loose sensor or one that is not tightly secured on the mounting bracket.
- The sensor may be too deep inside trailer body. There should be a maximum 41.2 inch ft depth from back end of trailer to sensor installation positions.

If TailGUARD is not functioning correctly or as expected, immediately have the TailGUARD inspected to correct the issue. Whether or not the system is working correctly, it is the driver's responsibility to avoid collisions during parking maneuvers. Failure to do so can result in serious personal injury or death, and/or severe property damage.

5 Introduction

TailGUARD reduces risk when reversing by detecting stationary and moving objects in the blind spot behind the trailer and actively braking the trailer at a safe distance from the object. The system reduces stress for the driver while reversing and helps to avoid collisions with pedestrians, loading ramps, barriers, trees, forklifts, cars and other objects behind the vehicle.

TailGUARD is activated automatically when it senses the trailer is moving backwards The system brakes the trailer automatically if it approaches an object within a parameterized distance between 1.6 and 6.5 ft (50 and 200 cm). Distance configuration shall be set during the installation process. The TailGUARD default stopping distance is 2.3 ft (70 cm).

5.1 Functional Description

When the trailer is moving backwards, TailGUARD is activated by sensing and the external marker lights are activated via the electronic extension module. The flashing frequency of marker lights increases the closer the vehicle is to the object. If the trailer is equipped with the buzzer (optional) activation will cause their actuation also via electronic extension module.

If the external marker lights are not activated while reversing the trailer, the system may not be functioning properly and TailGUARD system must be checked and reviewed, including the external marker lights.

During installation of the TailGUARD, the object's stopping distance shall be parameterized via TOOLBOX PLUS™ respecting the range between 1.6 and 6.5 ft (50 and 200 cm). TailGUARD default object's stopping distance is 2.3 ft (70 cm).

When the trailer reaches the object's stopping distance, the vehicle will brake for 3 seconds and then after 3 seconds it is released. After 3 seconds from TailGUARD braking activation, the driver can start slowly reversing again in order to continue rearward movement towards an object

When moving backwards, if the vehicle's speed is equal or below 5.6 mph (9 km/h), the brake is activated for the final stop in front of an object. In order to be detected, the height of an object shall meet the height of sensors installation.

If the trailer reaches the object's stopping distance at a speed above 5.6 mph (9 km/h), the system triggers short brake pulses to alert the driver of excessive speed until the speed falls down to 5.6 mph (9 km/h). Finally, when the speed falls down to 5.6 mph (9 km/h), the brakes are automatic and completely activated.

> If the short brake pulses (alerts) are ignored and/or the speed continues to increase, the TailGUARD is switched off (deactivated) at 7.5 mph (12 km/h) and the object may be bumped.

5.1.1 General System Overview

Fig. 1

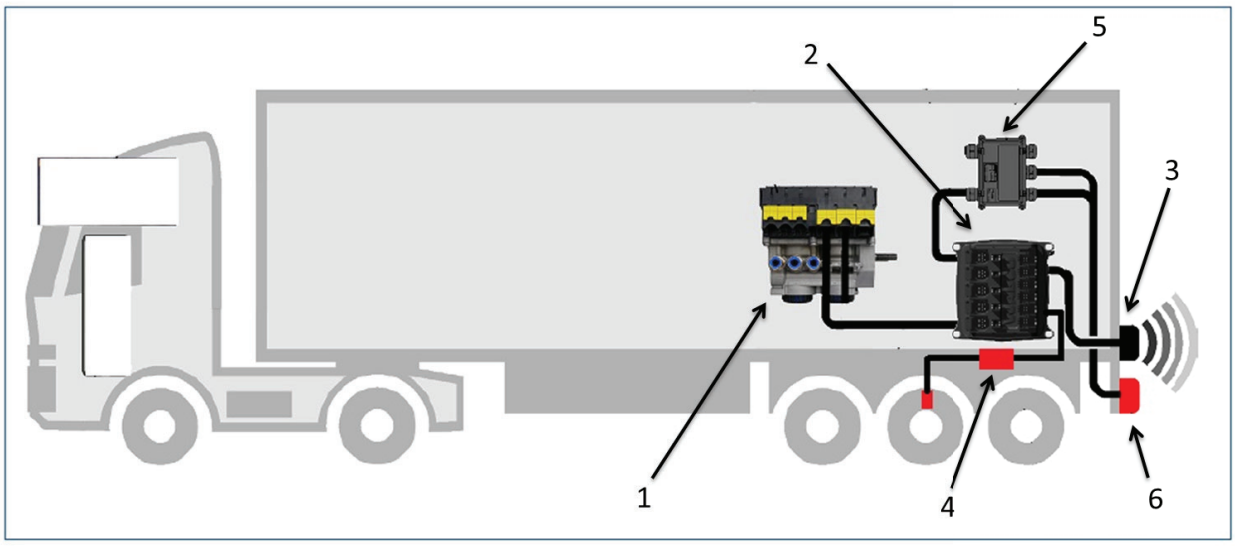

4016247a

Item	Designation
1	RSS*plus*
2	Electronic extension module
3	Ultrasonic sensors
4	Reverse signal box + reverse sensor
5	Junction box
6	External marker lights

5.1.1.1 System Configurations

Features	TailGUARDlight™	TailGUARD™	TailGUARDroof™	TailGUARDMAX™
Typical logistical environment	Large loading ramps with equal shape or even walls; no objects or people behind the trailer vehicle.	Loading ramps and large objects, such as palettes, vehicles and posts of metal or wood that vary in shape or size and are unknown to the driver.	Areas with restricted heights: e.g. warehouses, loading gates, trees and roof constructions.	Areas with small and/ or moving objects: e.g. forklift loading, street signs, shops, residential areas.
Number of ultrasonic sensors (red dot = sensor)	 4017268a 2x	 4017269a 3x	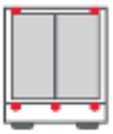 4017270a 5x	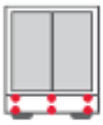 4017271a 6x
Area covered by sensors (view from top of vehicle)	 4017272a Limited	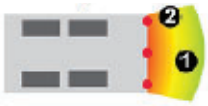 4017273a Complete rear of the vehicle is covered by sensors. 1 and 2 indicate objects behind the vehicle.		
Area covered by sensors (side view)	 4017274a	 4017274a	 4017276a	 4017275a
Sensitivity of sensors	Only objects directly behind the left or right sensor are detected and displayed. Objects located between the sensors are not detected.	Big moving objects are detected independent of one another and displayed.	Objects at ground level and roof level are detected and displayed, independently of one another.	Small moving objects are detected independent of one another and displayed.
Position of the sensors as shown in the drawing	841 802 280 0	841 802 281 0 841 802 285 0	841 802 283 0 841 802 284 0	841 802 282 0

The TailGUARD coverage takes into consideration the trailer's width and a maximum distance from the object of 13 ft (4 m) ("Monitoring Area"), depending on the system configuration, object size and its surface.

The ultrasonic sensors are mounted on a vertical surface on the rear of the trailer and monitor an area between the trailer's outside edge at the side and the center of the vehicle through the 10° bend in the housing. When reversing in a narrow alley, only the area behind the trailer is monitored in this manner; vehicles parking next to the lane, for instance, are not monitored.

5.1.2 TailGUARDlight™ – Ramp Approach Support

This system only measures the distance to a ramp or a wall with two ultrasonic sensors. The entire area behind the trailer is not monitored.

TailGUARDlight™ supports the driver when the vehicle is moving in reverse (ie “reversing”) to loading ramps or parking by a wall. Here, in interaction with Trailer RSS*plus*, the trailer applies brakes automatically before reaching the load ramp or a wall.

The braking pressure applied depends on trailer speed and the distance to the ramp or wall measured by the ultrasonic sensors.

If the angle between the ramp and the direction of trailer movement is > 10°, the ramp will not always be detected due to the sensors design.

5.1.3 TailGUARD – Reverse Monitoring System (Includes TailGUARD, TailGUARDRoof™ and TailGUARDMAX™)

With this system, the entire area behind the trailer is monitored with ultrasonic sensors (functional details). WABCO recommends a minimum system of three sensors on the main level (TailGUARD).

TailGUARD detects objects on the ground, such as light posts or other objects that are located in the pick-up area of the ultrasonic sensors (at the height of the ultrasonic sensors).

Upon installation, the sensors’ installation position must be maintained for full performance of the system.

5.1.4 Acoustic and Visual Driver Information

If an object is located within the Monitoring Area, the external marker lights will function according to the distance to object, as described below:

The changes in light frequency occur at distances of 10 ft, 6 ft and 2 ft (3 m, 1.8 m and 0.7 m). The buzzer can’t be used to identify distance as it does not have frequency changes, it only identifies that the system is active.

Distance to Object	External Lights
> 10 ft (> 3 m)	Light flashing (1 Hz)
6 ft – 10 ft (1.8 m - 3 m)	Light flashing (2 Hz)
2 ft – 6 ft (1.8 m - 0.7 m)	Light flashing (4 Hz)
< 2 ft (< 0.7 m) - automatic braking	Light permanently on
< automatic (parameterized) braking distance	Light permanently on
Component test after switching on ignition (only if v < 1 mph)	0.5 seconds on
System activated	0.5 seconds
Fault message if system is not active (only if v < 1 mph)	Off

5.1.4.1 Activation

TailGUARD external marker lights and the buzzer are activated when trailer starts moving backwards.

The external marker lights are activated and start flashing according to the object distance. Note that the frequency changes in line with the object distance.

The optional buzzer is activated with constant frequency and it does not change its frequency according to the object distance as the external marker lights.

5.1.4.2 Deactivation

The function is deactivated (switched off) by:

- Speed > 7.5 mph (12 km/h) and/or supply pressure lower than 65 psi (4.5 bar); or
- A failure in the RSS*plus* system (RSS*plus* cannot brake automatically in this case); or
- A failure in the TailGUARD system components.

If the system is deactivated, external marker lights are not actuated; however, the buzzer will be normally activated. Deactivating TailGUARD is stored as an event in the operating data recorder (ODR).

6 Components

The following table provides a general list of TailGUARD system components. For specific kit part numbers, refer to Appendix II.

Item	Component		Part Number	Qty
1	 4016254a	RSS*plus*	480 107 001 0	1
2	 4016255a	RSS*plus* power cable	449 351 047 0 – 4.7 m	1
3	 4016256a	RSS*plus* wheel speed sensor cable	449 723 030 0 – 3 m	4
4	 4016257a	Electronic Extension Module (ELEX)	446 122 071 0	1
5	 4016258a	ELEX - power cable	449 303 020 0 – 2 m	1
6	 4016259a	ELEX - sensor cable	449 806 060 0 – 6 m	1

Item	Component		Part Number	Qty
7		Ultrasonic sensor extension cable	449 747 060 0 – 6 m	2
8	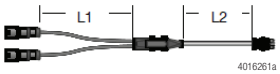	Ultrasonic sensor distribution cable	894 600 024 0	Min 1 Max 5
9		Ultrasonic sensor	446 122 450 0	Min 2 Max 6
10	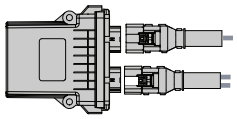	Reverse signal box	446 122 200 0	1
11		Diagnostic cable	449 609 060 0	1
12		ELEX to junction box cable	449 908 060 0	1
13	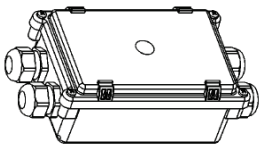	Junction box	446 122 633 0	1
14		Buzzer (optional)	894 450 000 0	1
15		Green external light (optional)	446 105 523 2	2
16		External light cable (optional)	449 900 100 0 – 10 m	2

7 Installation

7.1 Required Components

In addition to RSS*plus*, the electronic extension module (ELEX), ultrasonic sensors, reverse sensor with reverse signal box and respective cables are required. The external marker lights must be connected through a junction box to the electronic extension module. The buzzer (optional) is connected to the reverse signal box.

7.1.1 Electronic Extension Module

The cover of the electronic extension module must be removed to install/remove the cables.

- Use a screwdriver with a minimum length of 4 in (11 cm) to release the catch on the housing to remove the cover. Figure 2.

Fig. 2

- Mount the electronic extension module vertically only, with the cable openings facing the bottom or the side.

7.1.2 Installation Dimensions

Fig. 3

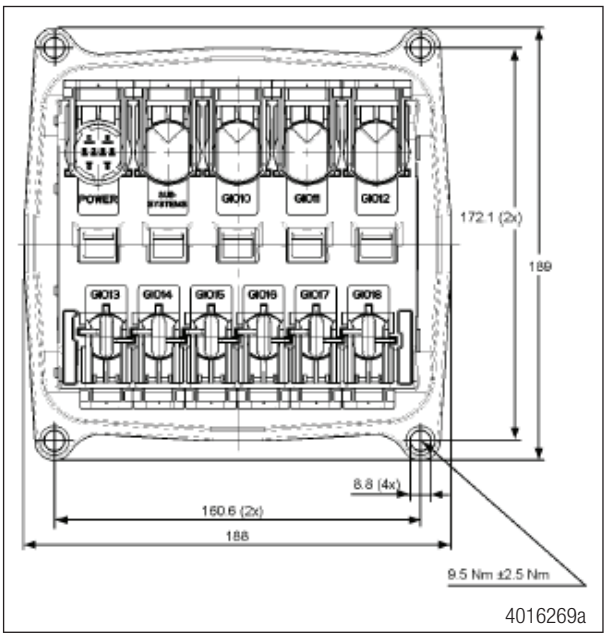

- Fasten the connector housing of the 8-pin plug-in connector with cable ties on the respective bracket catch. Figure 4.

Fig. 4

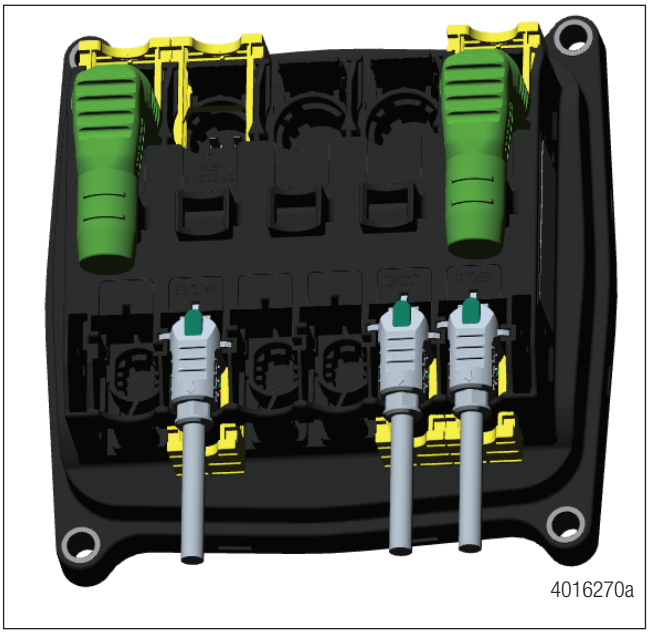

Legend	
GIO12	ELEX to junction box cable 449 908 060 0
GIO14	Reverse signal box 446 122 200 0
GIO17	Cable for ultrasonic sensors 449 806 060 0
POWER	Power supply cable for electronic extension module 449 303 020 0 connected to sub-system port at RSS*plus*
SUBSYSTEM	Diagnostic cable 449 609 060 0 must be connected to subsystem port for system parametrization

- Once the cables have been installed, reinstall the cover.
- Make sure that all catches are firmly in place.
- The open side must face in the direction of the 4-pin slots.

7.1.3 Cables and Dummy Caps

Observe the following safety instructions for handling cables:

- Plan your installation position so that cables cannot become kinked.
- Fasten the cables and connectors so that the plug connections are not subjected to any tensile stress or lateral forces.
- Never route cables over sharp edges or in the vicinity of aggressive media (e.g. acids).
- Route the cable to the connections so that no water can enter the connector.
- Fasten the cable ties so that the cable is not damaged.
- When using tools, please follow the instructions of the cable-tie manufacturer.
- If the cables are too long, do not wind them up, instead lay them in loops.

Open the yellow slider for the lock before you plug the cable end connectors into the respective slot on the ECU frame. If the slider is in the locked end position (condition at delivery), you can use a size 13 open-end spanner to release the notch from either the top or from below.

Once the slider is unlocked, pull out the slider up to the cover end stop by hand in order to allow access to the connector guide.

Insert the cable end (or dummy cap) perpendicularly into the corresponding slot of the ECU. Ensure that the correct polarity and coding (connector to slot) is followed. They can only be inserted if the two parts match. The black dummy caps for the 4- and 8-pin slots are not coded and match the respective slot.

Press the cable end into the slot with a little initial force and push the locking slider back to its initial position. In this procedure, the hook of the slider latches in the ECU frame. The correct latching of the slider is confirmed by an audible “click” sound. In case the audible “click” sound is not heard, please reinitiate the installation to avoid damage to the products.

7.1.3.1 External Lights

Observe the following safety instructions for handling the lights:

- Plan the installation position so that lights are visible to the driver through the mirrors.
- WABCO recommends installing lights at the sides of trailers close to the rear of the trailer.
- The external lights are only indicators that the TailGUARD system is functioning properly.
- If the lights do not start to blink when the vehicle is in reverse, the TailGUARD system needs to be checked.
- The blinking frequency of the lights will increase as objects are closer to the trailer.

TailGUARD standard kits includes the ELEX cable and junction box and the customer is free to choose between the 3 scenarios below:

- Not installing external marker lights will not affect the TailGUARD system functions, but there will be no interface to identify system status.
- Use WABCO green external lights and cables.
- Customers have flexibility to procure their own lights.

In order to install the external marker lights, the ELEX to junction box cable 449 908 060 0 should be connected to GIO 12 of ELEX system. The flying lead of the ELEX cable could be distributed inside junction box using external light cables 449 900 100 0. The external light cable will connect to the marker light 446 105 523 2. Please follow wire connections in the following section.

Item	Component		Part Number	Qty
1	 4016265a	ELEX to junction box cable	449 908 060 0	1
2	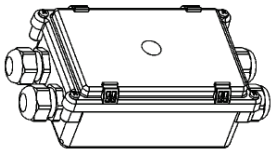 4016266a	Junction box	446 122 633 0	1
3	 4017319a	Green external light (optional)	446 105 523 2	2
4	 4017320a	External light cable (optional)	449 900 100 0 – 10 m	2

Fig. 5

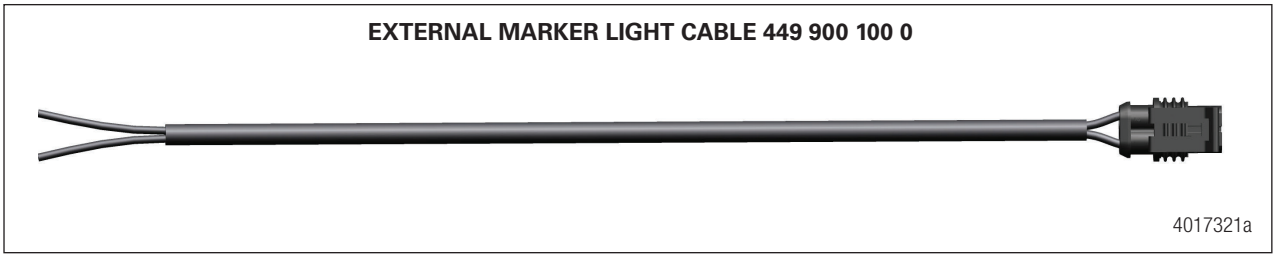

Light Cable Wire Colors	
Power	White Wire
Ground	Black Wire

Fig. 6

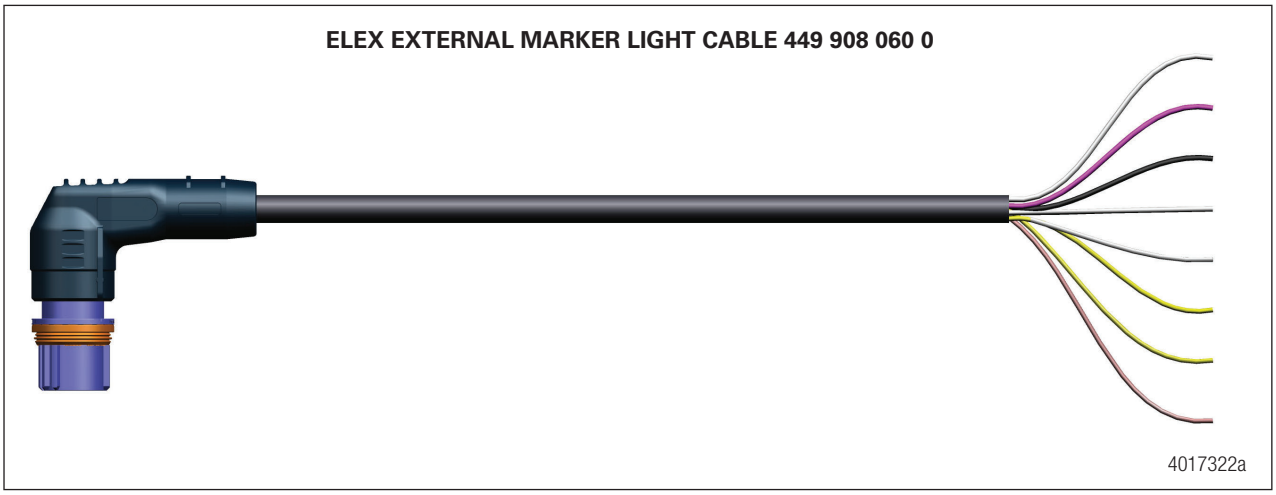

ELEX Light Cable Wire Colors	
Permanent Power	Pink Wire
Ground	White Wire
Right Side Light	Yellow/Brown Wire
Left Side Light	Yellow/Black Wire

To install external marker lights, the wires from ELEX cable 449 908 060 0 and the external lights cables 449 900 100 0 need to be connected through the junction box 446 122 633 0, following the steps.

- Permanent power (blue wire) from the trailer needs to be connected to ELEX cable via pink wire.
- Both ground wires from lights (black wires) need to be connected to ground of ELEX cable (white wire).
- Right side light power (white wire) must be connected to ELEX cable yellow/brown wire.
- Left side light power (white wire) must be connected to ELEX cable yellow/black wire.

General Installation Wiring			
449 908 060 0	Weather Pack (J560 connector)	Right Rear Light (449 900 100 0)	Left Rear Light (449 900 100 0)
Pink	Blue (Constant Power)		
White/Green			
White/Brown			
White (Ground)		Black (Ground)	Black (Ground)
Black			
Yellow/Black			White
Yellow/Brown		White	
Brown			

Fig. 7

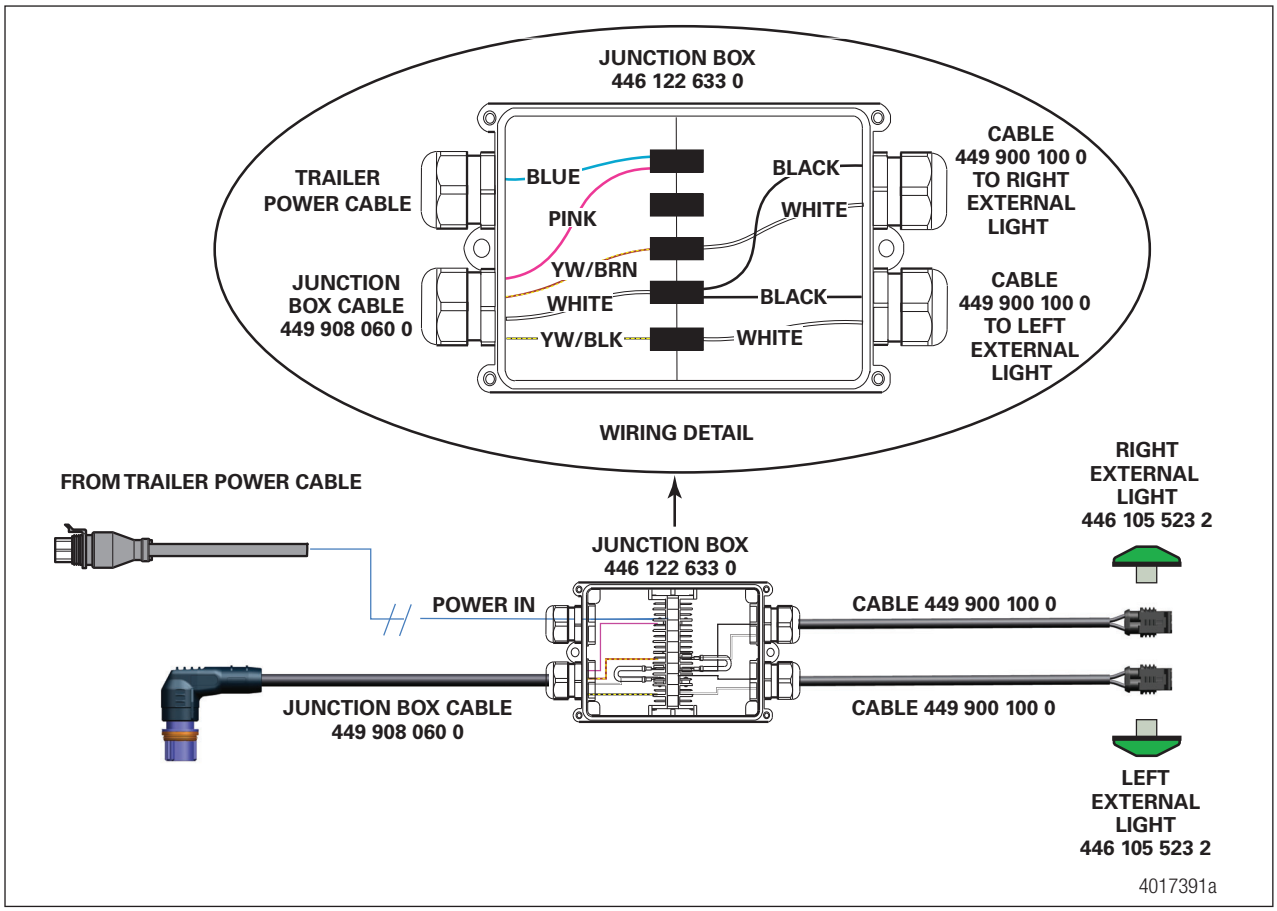

If a customer chooses to install his own lights, power and ground connections must be checked via light supplier.

7.1.3.2 Functional Check

In order to verify if the TailGUARD system is working correctly, please reverse the trailer at a speed between 1 and 5.6 mph. If the marker lights are blinking, this indicates that the TailGUARD system is working properly. The frequency of the marker light changes according to trailer distance to an obstacle, as presented in Section 5.1.4. External marker lights will be checked during the system installation using TOOLBOX PLUS™ Software.

7.1.4 Ultrasonic Sensors

⚠WARNING

Risk of accidents: TailGUARD function not available due to incorrect installation of ultrasonic sensors.

Ultrasonic sensors must be installed correctly according to the procedures and diagrams provided in this manual. If sensors are not installed correctly, the TailGUARD system may not detect objects or function as required, resulting in risk of accidents.

⚠CAUTION

Avoid damage to the ultrasonic sensors.

Ultrasonic sensors can be damaged if used as a climbing aid on the trailer. Mount ultrasonic sensors in a strong, protective enclosure if necessary.

Observe the following safety instructions for handling ultrasonic sensors:

- The surface to which the ultrasonic sensor is mounted must be even and must be at least 2 mm larger than the ultrasonic sensor (this is required to protect the drainage holes in the rear against direct high-pressure cleaning).
- Ultrasonic sensors must not be mounted in a U-profile because this could negatively interfere in the performance of the system. WABCO recommends mounting the ultrasonic sensors mechanically protected to avoid damages.
- The ability to detect objects largely depends on the ultrasonic sensors position on the trailer. Make sure that the ultrasonic sensors are installed at a height of at least 2 ft (60 cm) and follow the instructions herein
- No other vehicle components should be installed within the ultrasonic sensor‘s range of vision.
- The rate of detection depends on object surfaces:
  - Ultrasound is best reflected by smooth surfaces that are positioned at a right angle to the sound‘s direction.
  - Small and unfavorable surfaces such as meshed structures, furry or hairy surfaces at an oblique angle to the sound‘s direction are not detected so easily.

Figure 8 shows only one of many possible ultrasonic sensor positions. The yellow areas represent an example of the area monitored by the ultrasonic sensors.

Fig. 8

When planning the routing of cables, note the maximum length of 131 ft (40 m) between the Electronic Extension Module and the last ultrasonic sensor.

7.1.4.1 TailGUARDlight

- Mount the two ultrasonic sensors, 446 122 450 0, horizontally at a maximum of 4.7 in (0.12 m) from the right or left outer edge of the trailer to exactly cover the trailer outer dimensions.
- Install depth sensor: TOOLBOX PLUS™, Electronic Extension Module enter the position of the ultrasonic sensor (distance trailer to rear side) – in relation to the last trailer edge.
  - This distance should not be more than 1.15 ft (35 cm).
- If protruding ramps are supposed to be detected, at least one ultrasonic sensor must be mounted at the height of the ramp (buffer).

Note the following installation dimensions in Figure 9.

Fig. 9

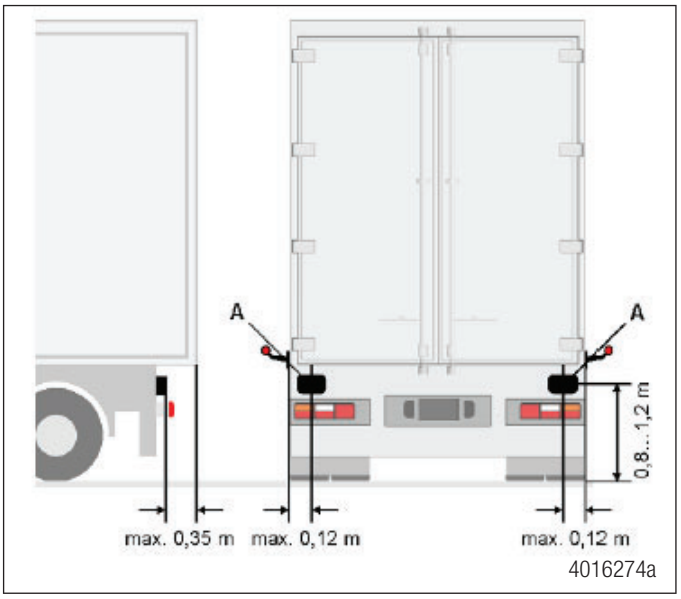

Legend	
A	Ultrasonic sensor 446 122 450 0

7.1.4.2 TailGUARD

- Mount the outside two ultrasonic sensors, 446 122 450 0, inclined horizontally inwards.
- If the middle sensor, 446 122 450 0, is not exactly centered, mount it so that it is inclined in the direction of the farther away outer sensor.
- The minimum height of the ultrasonic sensor is 2 ft (0.6 m).
- The parameters for the installation position are configured in the TOOLBOX PLUS™.
- Mount the central ultrasonic sensor at max. 6 in (15 cm) up or down.

Note the installation dimensions for TailGUARD in Figure 10.

Fig. 10

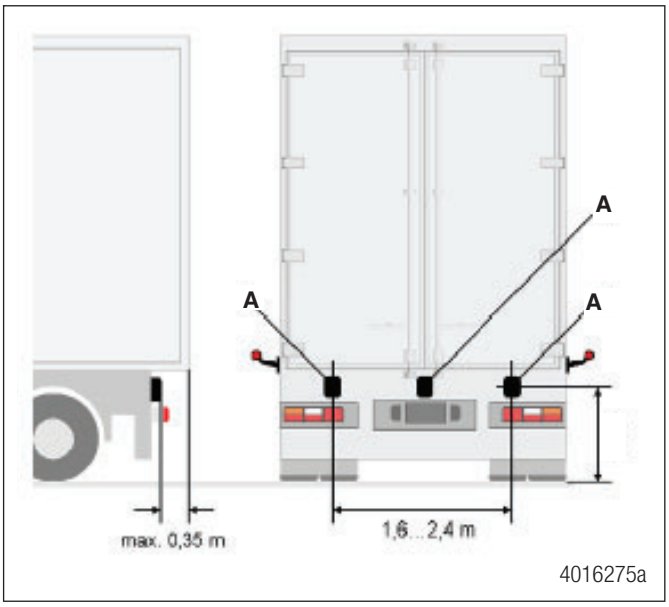

Legend	
A	Ultrasonic sensor (0°) 446 122 450 0 **Minimum installation height 2 ft (60 cm)!**

7.1.4.3 TailGUARDroof

- Mount the five ultrasonic sensors horizontally in two levels.
- Mount the outside ultrasonic sensors 446 122 450 0 inclined horizontally inwards.
- If the middle sensor, 446 122 450 0, is not exactly centered, mount it so that it is inclined in the direction of the farther away outer sensor.
- The designation has to be entered in TOOLBOX PLUS™ software.

Note the following installation dimensions in Figure 11.

Fig. 11

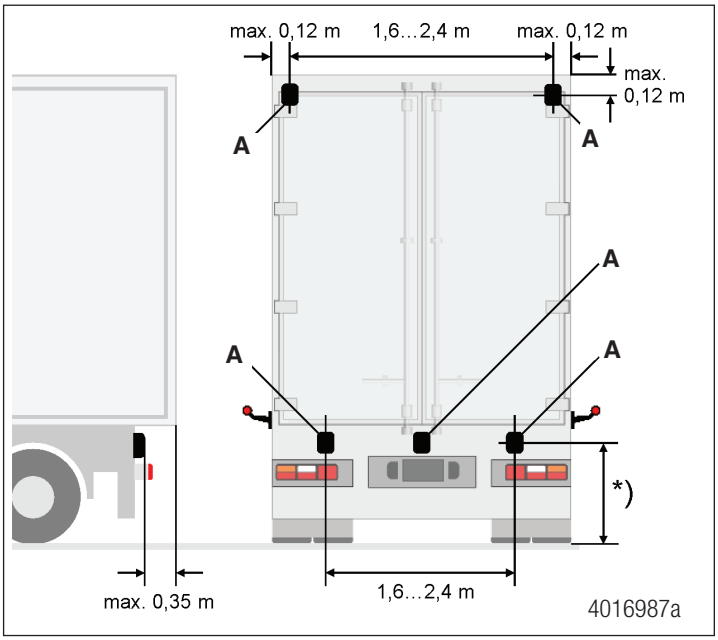

Legend	
A	Ultrasonic sensor 10° 446 122 450 0 **Minimum installation height 2 ft (60 cm)!**

7.1.4.4 TailGUARDMAX

- Mount 6 ultrasonic sensors horizontally in two levels.
  - Only if the 6 ultrasonic sensors are mounted on the vehicle in the arrangement shown in the following will the system meet all requirements of ISO 12155 (obstacle detection device during reversing).

Both levels follow the same install guidelines:

- Mount the outside ultrasonic sensors 446 122 450 0 (10°) inclined inwards.

- Mount the ultrasonic sensor 446 122 450 0 (10°) centrally. If the middle sensor, is not exactly centered, mount it so that it is inclined in the direction of the farther away outer sensor.
- Distance ultrasonic sensor 1 (left) – ultrasonic sensor 2 (right):
  - The ultrasonic sensors on the main level must be installed with spacing of 5.9 ft (180 cm).
  - The main level must be installed at a height of 3 ft (90 cm) from the ground.
  - The additional level must be installed at a height of 1.3 ft (40 cm) from the ground.

Note the following installation dimensions in Figure 12.

Fig. 12

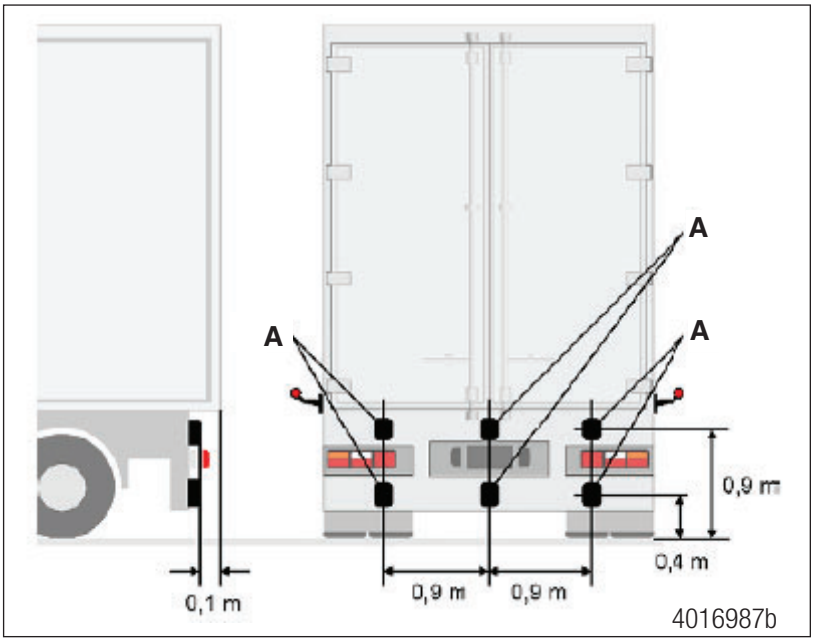

Legend	
A	Ultrasonic sensor 10° 446 122 450 0

7.1.5 Reverse Signal Box

⚠WARNING

Risk of accidents: TailGUARD function not available due to incorrect installation of reverse signal box and reverse sensor.

The reverse signal box and the reverse sensor must be installed correctly according to the procedures and diagrams provided in this manual. If sensor is not installed correctly, the TailGUARD system may not detect trailer moving backwards not triggering the monitoring system, resulting in risk of accidents.

Observe the following safety instructions for installing the reverse sensor and reverse signal box:

- To achieve 90° phase shift, use the mounting geometry and proper sensor alignment shown in the figure.
- Mount the sensor so that the center of the sensor face is over the center of the gear teeth or target. Ensure the mounted sensor is stable and vibration free.
- Locate sensor wires as far as possible from tone ring or wheel end. Do not run sensor wires in parallel with power cables.
- Maximum recommended cable length is 20 m (65 ft).

- The reverse signal box 446 122 200 0 have 4 components as shown in Figure 13 and table below.

The sensor needs to be installed in the direction shown in Figure 13.

Fig. 13

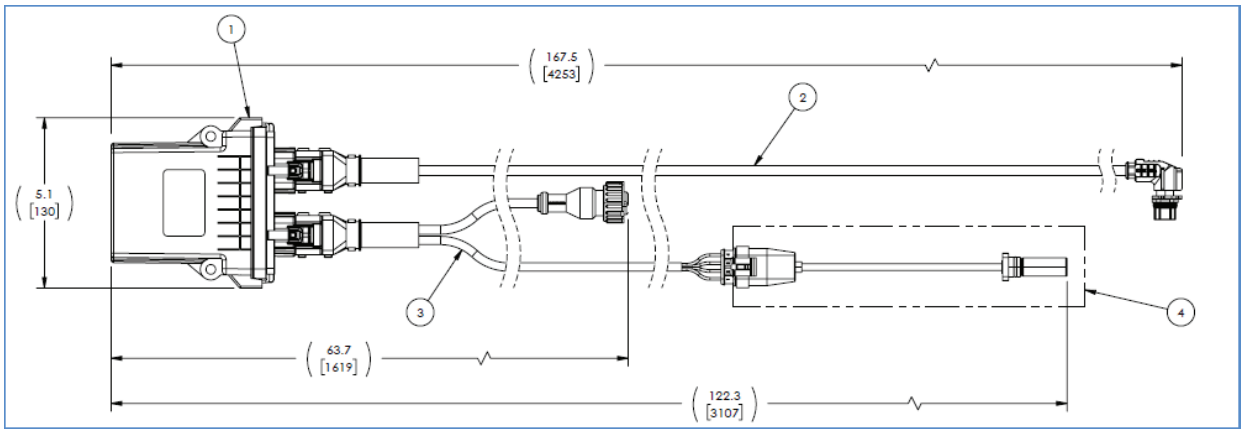

4017156a

Legend	
1	Reverse signal box ECU
2	ELEX harness is connected to ELEX GIO14 port
3	Reverse sensor and buzzer harness
4	Reverse sensor

- The reverse sensor is responsible for detecting when the trailer starts to move backwards and activates the TailGUARD system.
- A sensor holder need to be installed at trailer axle, current wheel speed sensor holder is not compatible with the reverse sensor.
- Sensor holder must follow the design of current speed sensor and protect as much as possible the sensor to avoid corrosion and environmental damage.

Fig. 14

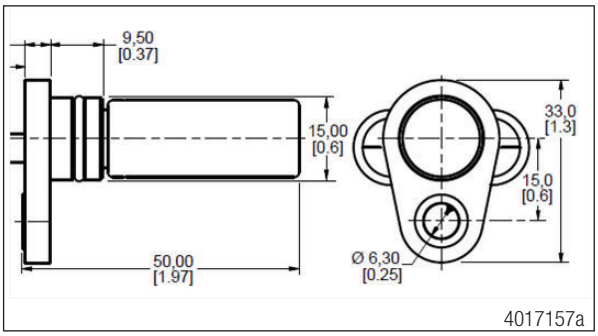

Reverse sensor dimensions (mm [in])

- The distance between the sensor and tone ring must not be larger than 0.08 in (2 mm). To get the correct position for sensor installation, the axle manufacturer will need to be consulted.
- The sensor has a specific orientation to be installed, otherwise system will not be able to identify forward and reverse movement, the mounting bolt need to face the the front of trailer, as it is shown in Figure 14.
- Reverse signal box is connected to GIO 14 of ELEX (Electronic extension module) as shown in Figure 15 and Figure 16.

Fig. 15

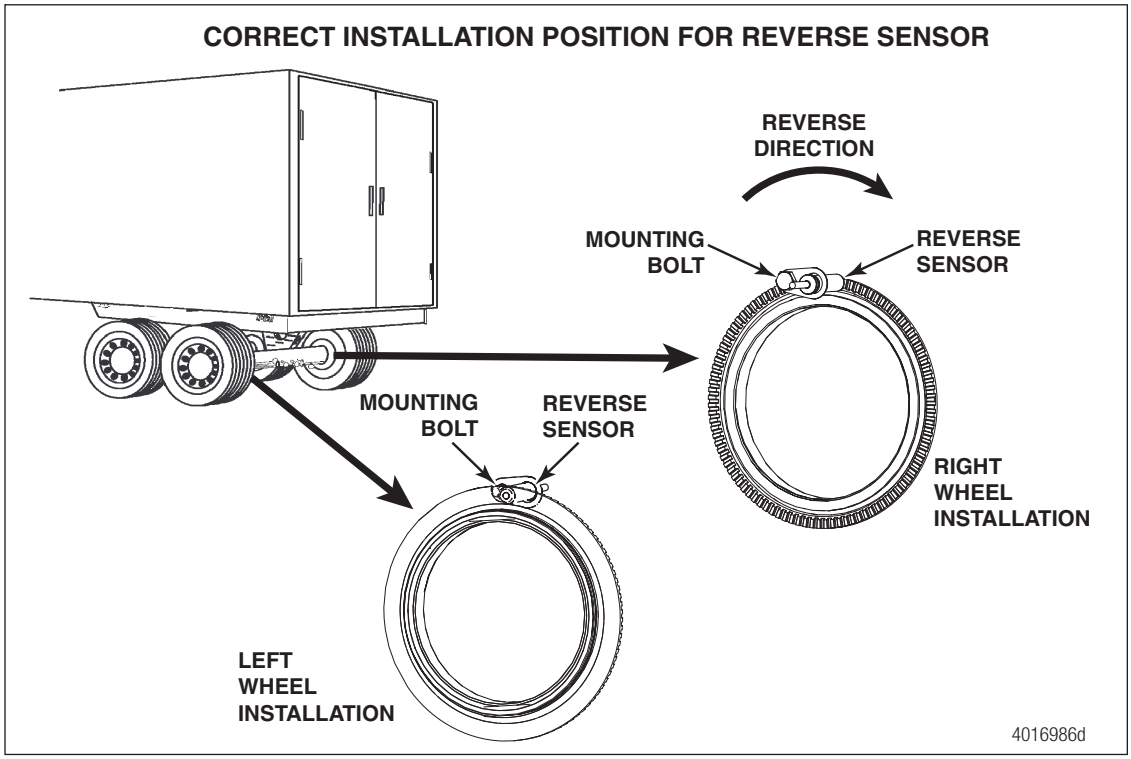

7.2 System Configuration TailGUARDlight

Fig. 16

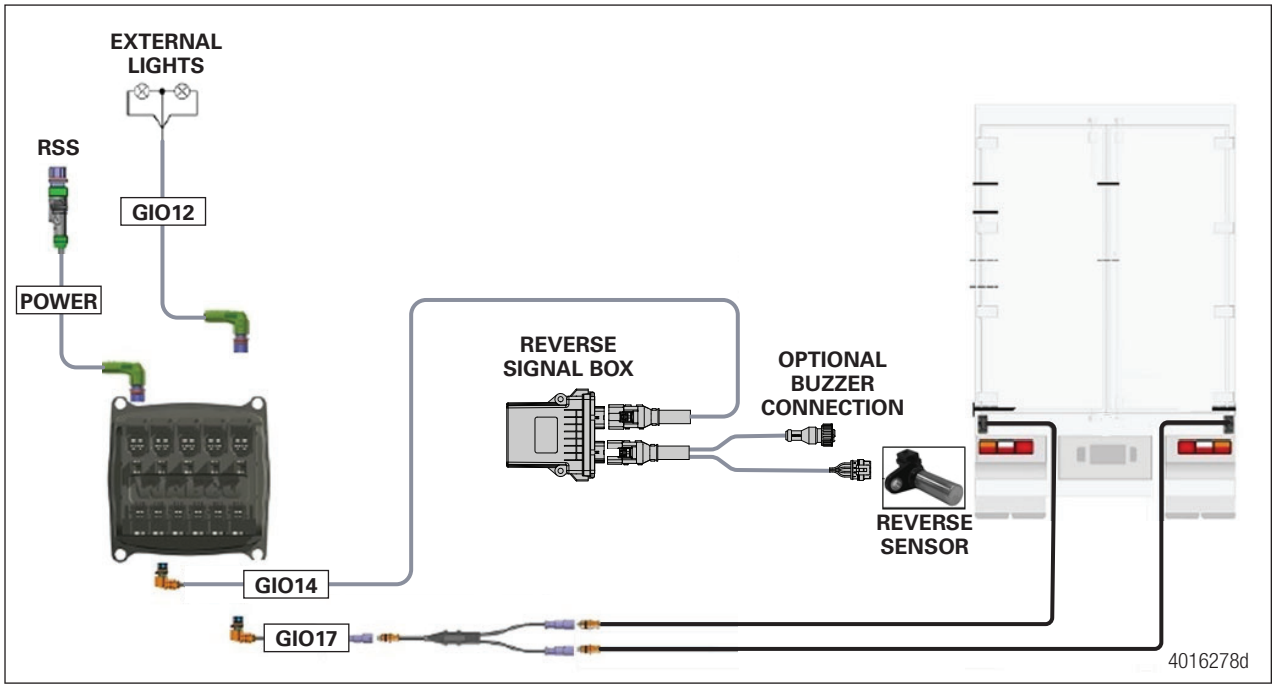

Reverse Signal Box, Installation

Legend	
GIO12	External marker lights via cable 449 908 060 0
GIO14	Reverse signal box 446 122 200 0
GIO17	Cable for ultrasonic sensors 449 806 060 0
POWER	Power supply cable for electronic extension module 449 303 020 0 connected to sub-system port at RSS*plus*

7.3 System Configuration TailGUARD

Fig. 17

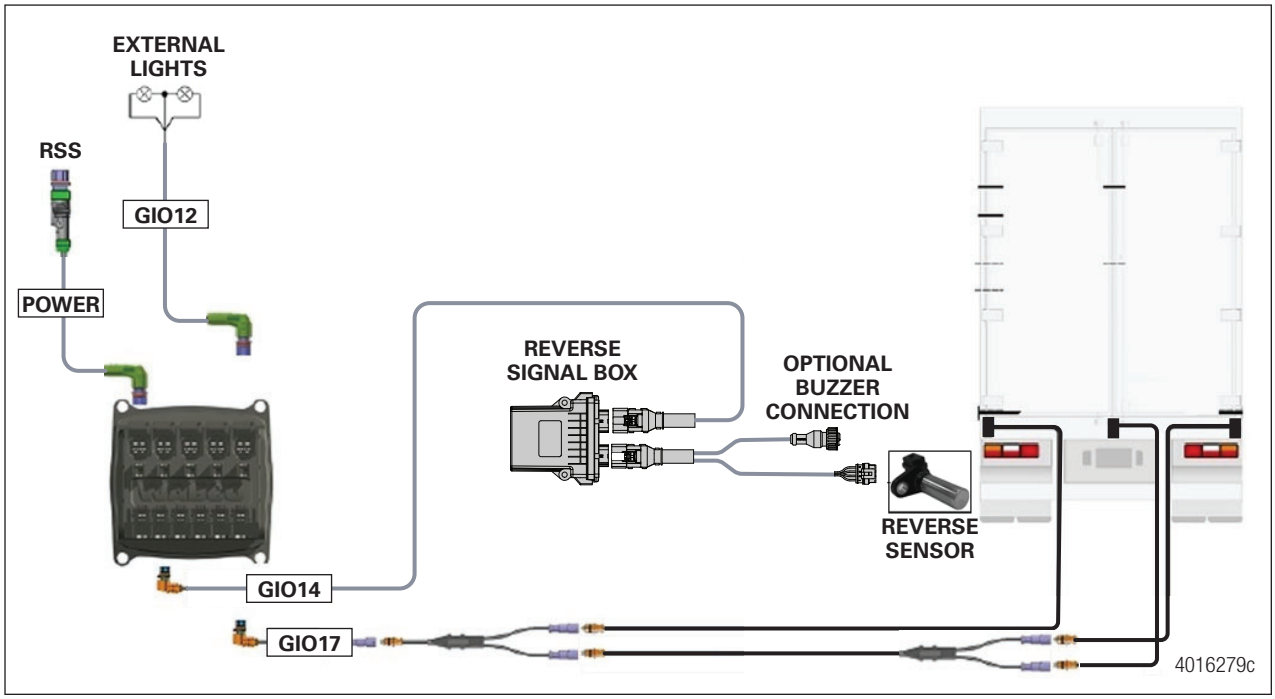

Legend	
GIO12	External marker lights via cable 449 908 060 0
GIO14	Reverse signal box 446 122 200 0
GIO17	Cable for ultrasonic sensors 449 806 060 0
POWER	Power supply cable for electronic extension module 449 303 020 0 connected to sub-system port at RSS

7.4 Full System Installation Overview

Fig. 18

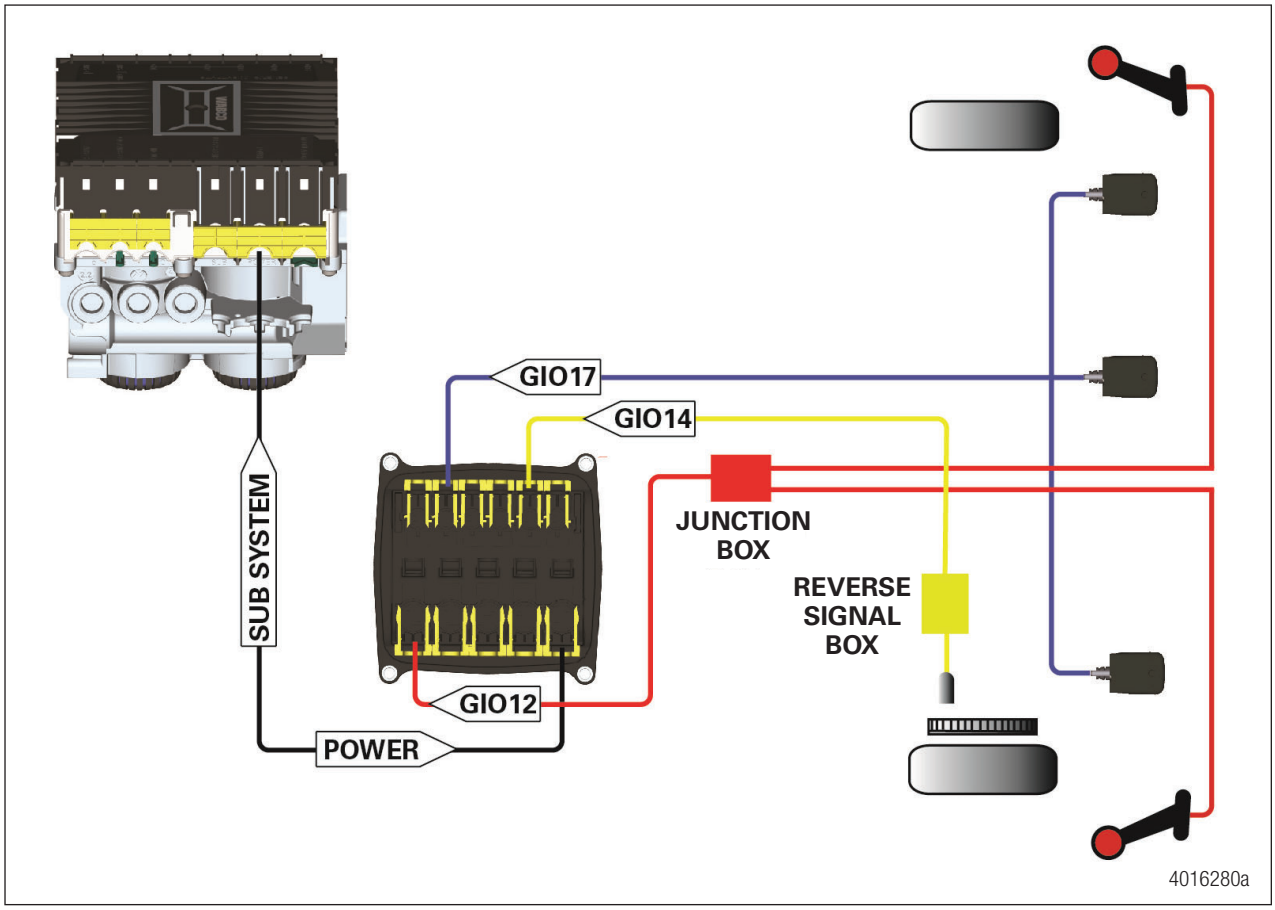

7.5 Start-up

Start-up requires assembly of the components on the trailer, connection of the diagnostic computer, supplying the system with power, and starting the TOOLBOX PLUS™ Software.

7.5.1 Diagnosis Hardware

7.5.1.1 Diagnosis Direct at ELEX

Component/Part Number	Figure	
Noregon DLA 2.0 or DLA+PLC Adapter	 4016281a	 4016292a
Noregon 9-pin Heavy-Duty Cable	 4016282a	
ELEX - Noregon TailGUARD Diagnostic Cable 449 609 060 0	 4017267a	

7.5.2 Configuration Setup Schematic

Fig. 19

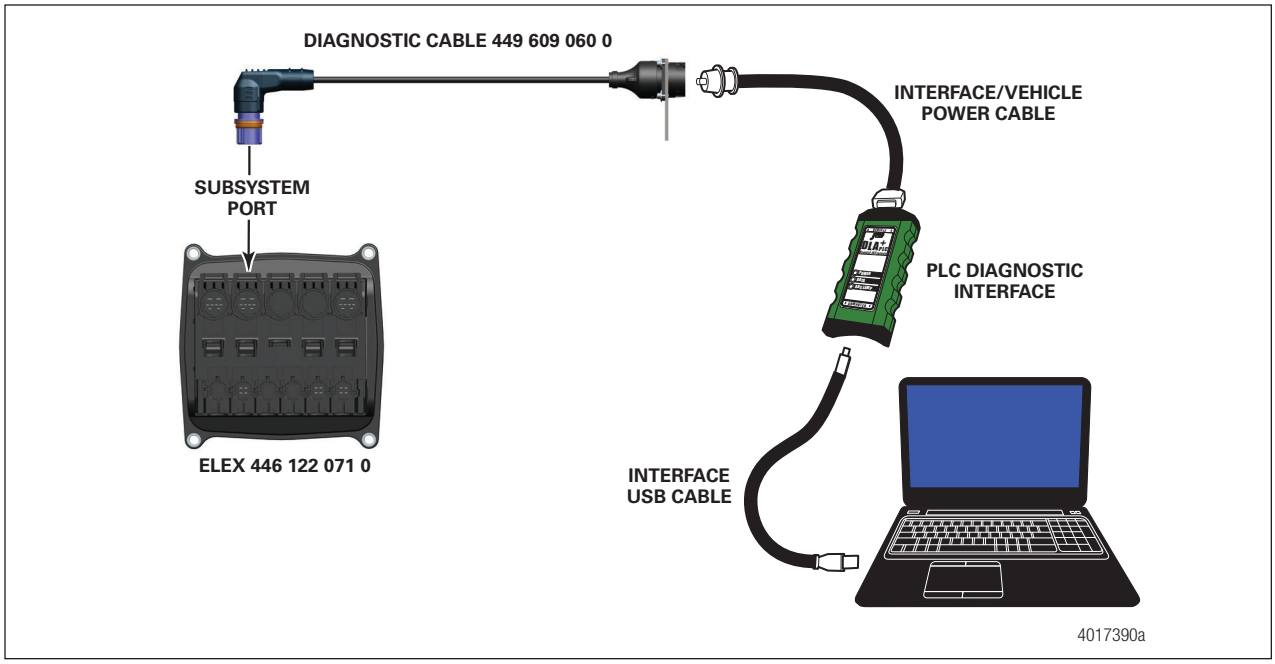

For TailGUARD start-up, connect the configuration cable to the Subsystem port on the ELEX. Then, use the 9-pin Heavy-Duty Cable with NOREGON DLA 2.0 or DLA+PLC Adapter to connect to the notebook with TOOLBOX™ Software installed.

7.5.3 Start-up TOOLBOX PLUS™

1. Open the TOOLBOX PLUS™ software. Figure 20.

Fig. 20

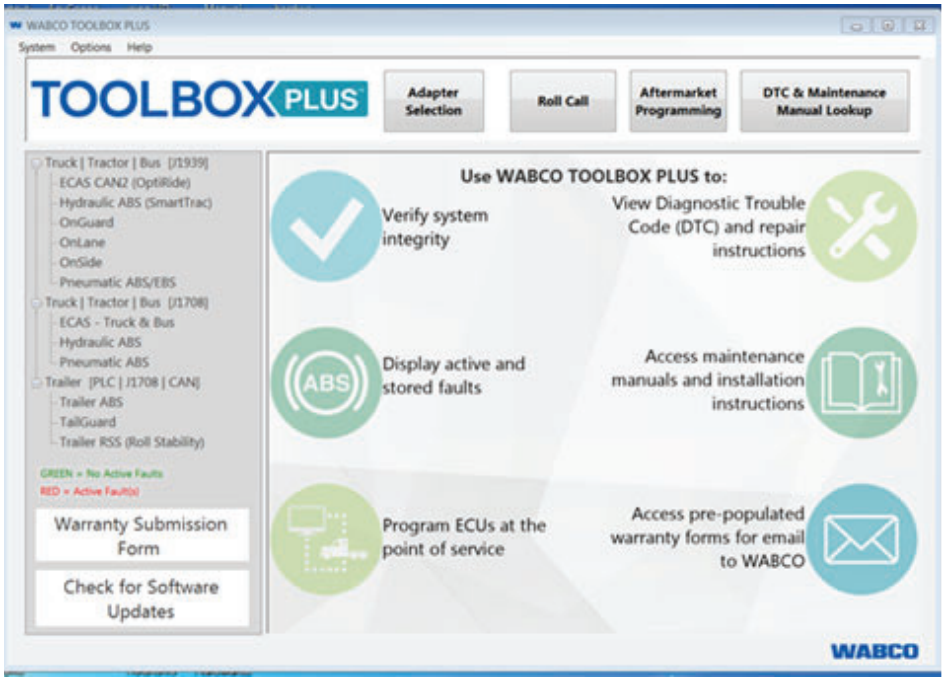

4017158a

2. Select adapter from the list according to your adapter availability. Figure 21.

Fig. 21

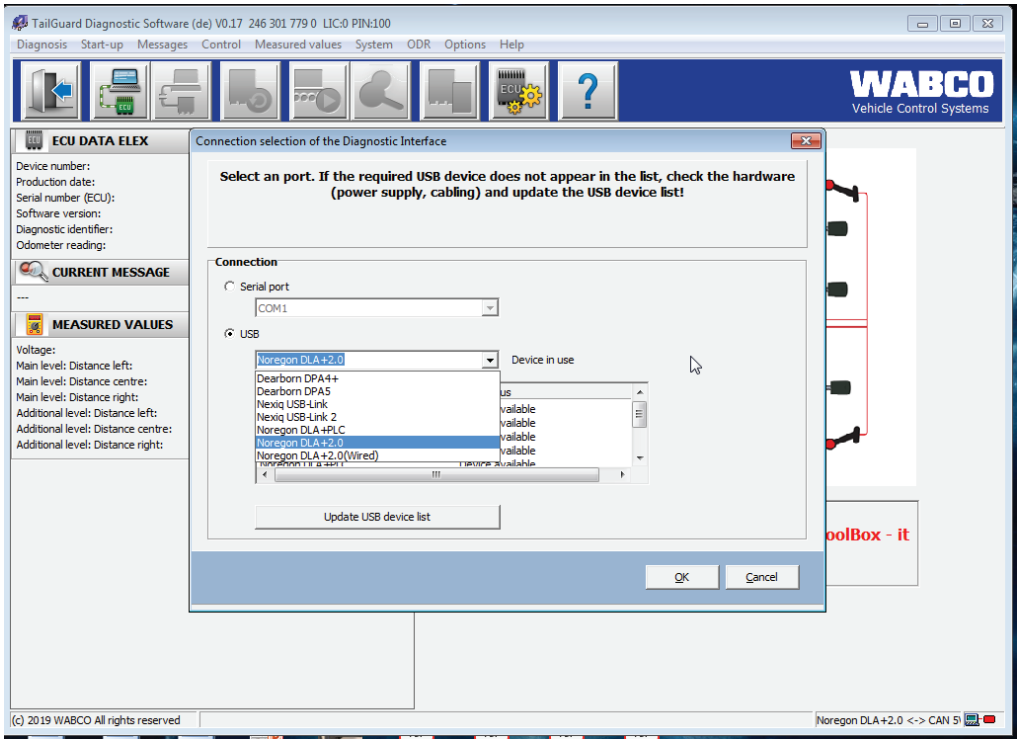

4016982a

7.5.3.1 Start Parameter Setting

1. To start parameter setting, select the icon with the green arrow as shown in Figure 22.

Fig. 22

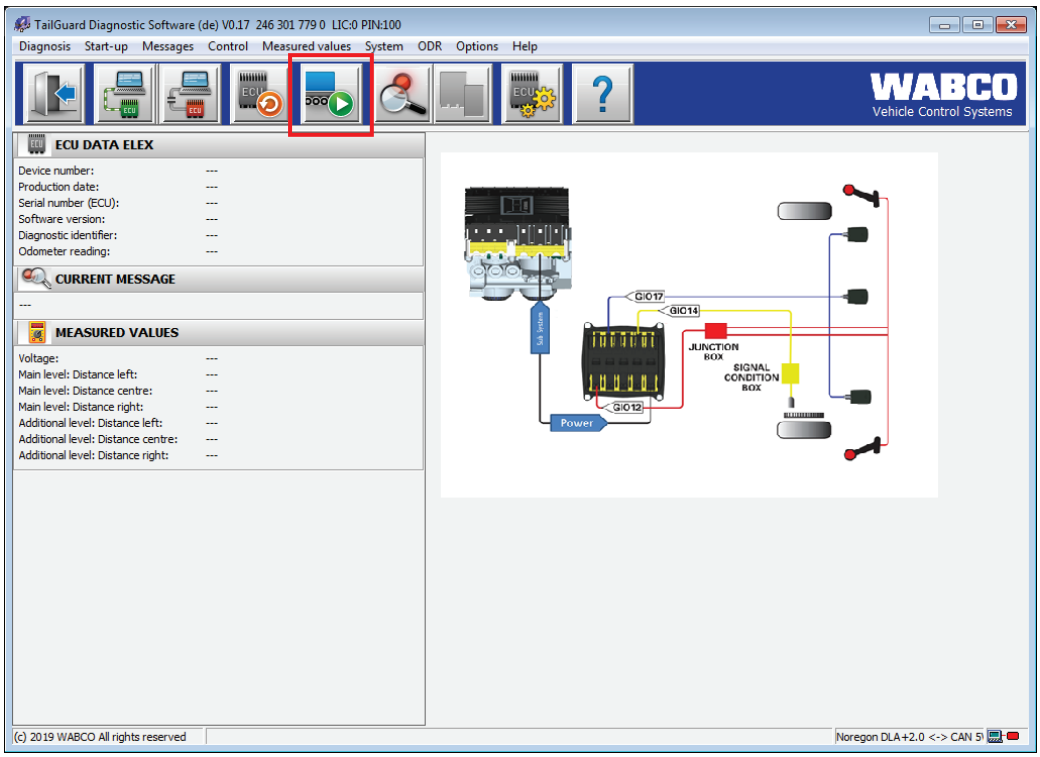

4016983a

2. Select “Test of the signal outputs” box, and then click on Start. Select Next. Figure 23.

Fig. 23

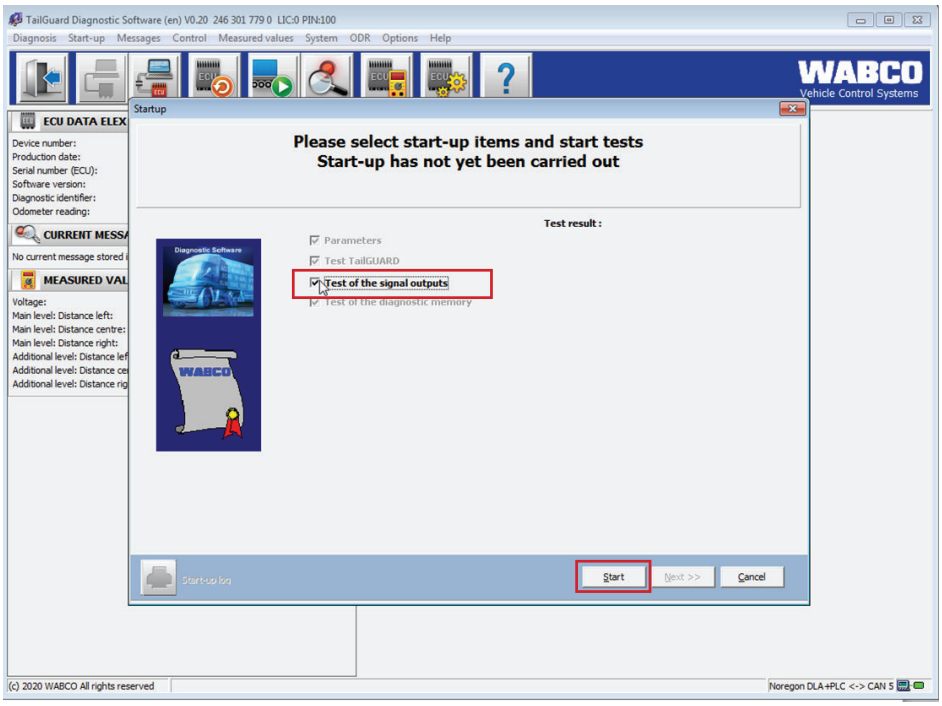

4017159a

3. Input operator name and trailer VIN number as shown at figure below and click on “Next”. Figure 24.

Fig. 24

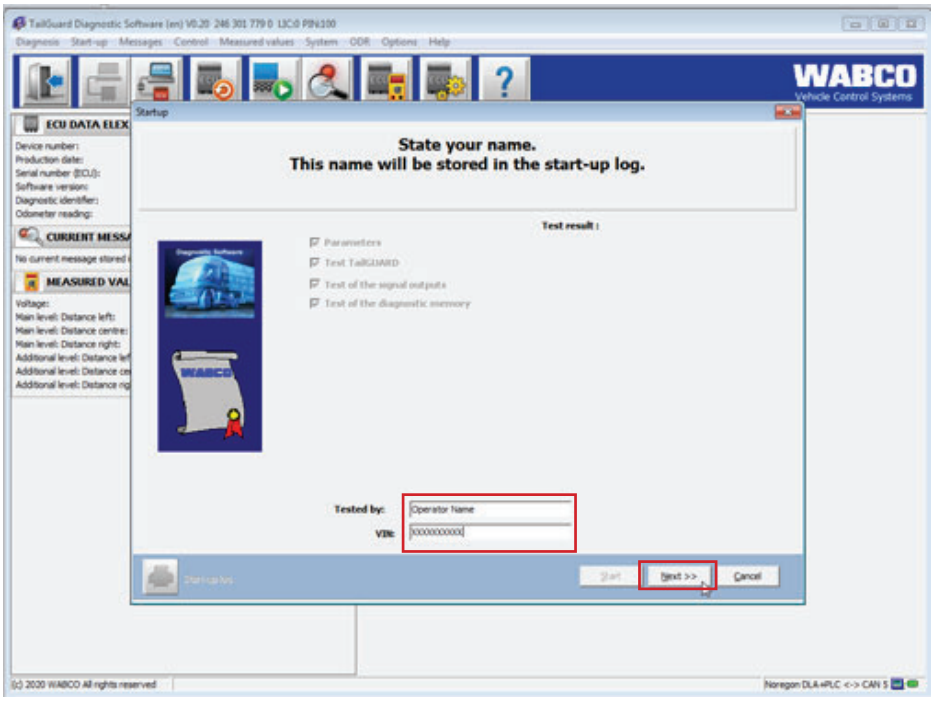

4017160a

4. Select Next. Figure 25.

Fig. 25

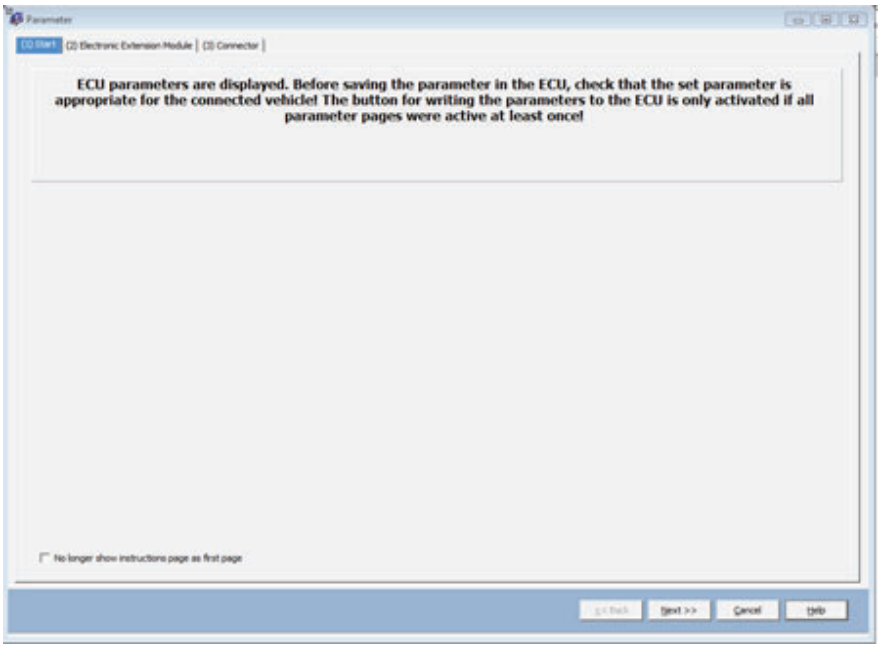

4017161a

7.5.3.2 Parametrization of TailGUARD (Reverse Monitoring System) (RMS)

If a system of 2 or 3 sensors is installed on the trailer, only the left box highlighted in Figure 26 should be completed. If a system of 5 or 6 sensors is installed on the trailer, the box “Reverse monitoring system expanded” should be selected, and both boxes left and right highlighted in Figure 26 should be completed. Refer to the following entry information to complete this process.

Fig. 26

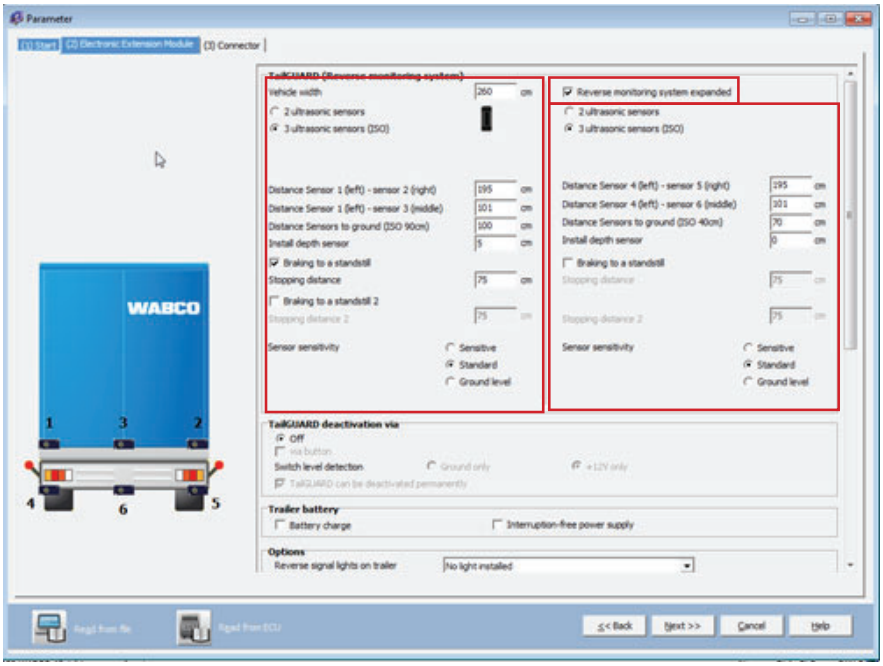

4017163a

General:

A maximum of six sensors can be connected in parallel to GIO 17 and 18.

Vehicle width

The maximum trailer width shall be entered.

2 Ultrasonic sensors

A system with two ultrasonic sensors can be chosen. WABCO recommends a system with at least three ultrasonic sensors because the detection capabilities are much better with three sensors.

3 Ultrasonic sensors

A system with three ultrasonic sensors can be chosen. The middle sensor is only to be installed with an offset upward or downward by a maximum of 4 in (10 cm).

Distance sensor 1 (left) - sensor 2 (right)

The distance between the two outer ultrasonic sensors (measured center to center) is entered. The sensors of the main level must be installed at a distance between 5.2 and 7.9 ft (160 to 240 cm).

Distance sensor 1 (left) - sensor 3 (middle)

The distance between the left sensor and the middle sensor is entered.

Distance to ground

The distance from the sensor center to the ground if the trailer is positioned at normal level, shall be between 2 and 5.2 ft (60 to 160 cm).

Install depth sensor

In this instance, the position of the sensor in relation to the last trailer edge must be entered. This distance should not be more than 1.2 ft (35 cm).

Braking to a standstill

Used to define whether or not the trailer should be completely braked.

Stopping distance

Enter the distance to the trailer at which the trailer will brake automatically because of ELEX and RSS*plus* if this distance from the object is achieved. Object stopping distance should be set between 50 and 200 cm (1.6 and 6.5 ft).

The Fine Adjustment setting allows the sensor sensitivity to be defined within a range from 90% to 130%. This may be necessary if the selected sensor sensitivity must be adjusted. This chiefly concerns trailers with complex rear body structures.

Sensor sensitivity

- Sensitive

High detection capability in close proximity (as delivered condition). Recommended sensitivity for the upper sensor level with TailGUARDMAX and for TailGUARD with low sensor spacing < 6 ft (< 1.8 m)

- Standard

The sensitivity of the sensors is somewhat reduced in close proximity to mask out objects which are permanently attached to the trailer and can cause reflections (rubber buffers, etc. for instance). This setting should be used with TailGUARDRoof for the top two sensors.

- Ground level

The sensitivity of the sensors is somewhat reduced at a distance, to mask out reflections caused by objects on the ground (curbs for instance). This setting should be used if the sensors are installed lower than 20 in (50 cm) (e.g. for the lower sensor row with TailGUARDMAX).

If “Expanded reverse system” is selected

2 Ultrasonic sensors

A system with extra two ultrasonic sensors can be chosen. It will be TailGUARDRoof configuration with a total of five sensors.

3 Ultrasonic sensors

A system with extra three ultrasonic sensors can be chosen. The middle sensor is only to be installed with an offset upward or downward by a maximum of 4 in (10 cm). It will be TailGUARDMAX configuration with a total of 6 sensors installed in two levels of maximum 1.3 ft (40 cm) between each other.

Distance sensor 1 (left) - sensor 2 (right)

The distance between the two outer ultrasonic sensors (measured center to center) is entered. The sensors must be installed at a distance between 5.2 and 7.9 ft (160 to 240 cm).

Distance sensor 1 (left) - sensor 3 (middle)

The distance between the left sensor and the middle sensor is entered.

Distance to ground

The distance from the sensor center to the ground if the trailer is positioned at normal level. As this field is for both the TailGUARDMAX and TailGUARDRoof configuration the distance shall be between 1.3 and 13.8 ft (40 to 420 cm).

Install depth sensor

In this instance, the position of the sensor in relation to the last trailer edge must be entered. This distance should not be more than 1.2 ft (35 cm).

Braking to a standstill

Used to define whether or not the trailer should be completely braked.

Stopping distance

Enter the distance to the trailer at which the trailer will brake automatically because of ELEX and RSS*plus* if this distance from the object is achieved. Object stopping distance should be set between 50 and 200 cm (1.6 and 6.5 ft).

Fine adjustment

The Fine Adjustment setting allows the sensor sensitivity to be defined within a range from 90% to 130%. This may be necessary if the selected sensor sensitivity must be adjusted. This chiefly concerns trailers with complex rear body structures.

Sensor sensitivity

- Sensitive

High detection capability in close proximity (as delivered condition). Recommended sensitivity for the upper sensor level with TailGUARDMAX and for TailGUARD with low sensor spacing < 6 ft (< 1.8 m).

- Standard

The sensitivity of the sensors is somewhat reduced in close proximity to mask out objects which are permanently attached to the trailer and can cause reflections (rubber buffers, etc. for instance). This setting should be used with TailGUARDRoof for the top two sensors.

- Ground level

The sensitivity of the sensors is somewhat reduced at a distance, to mask out reflections caused by objects on the ground (curbs for instance). This setting should be used if the sensors are installed lower than 20 in (50 cm) (e.g. for the lower sensor row with TailGUARDMAX).

Next, the “Options” box needs to be completed according to Figure 27, and the instructions below:

Fig. 27

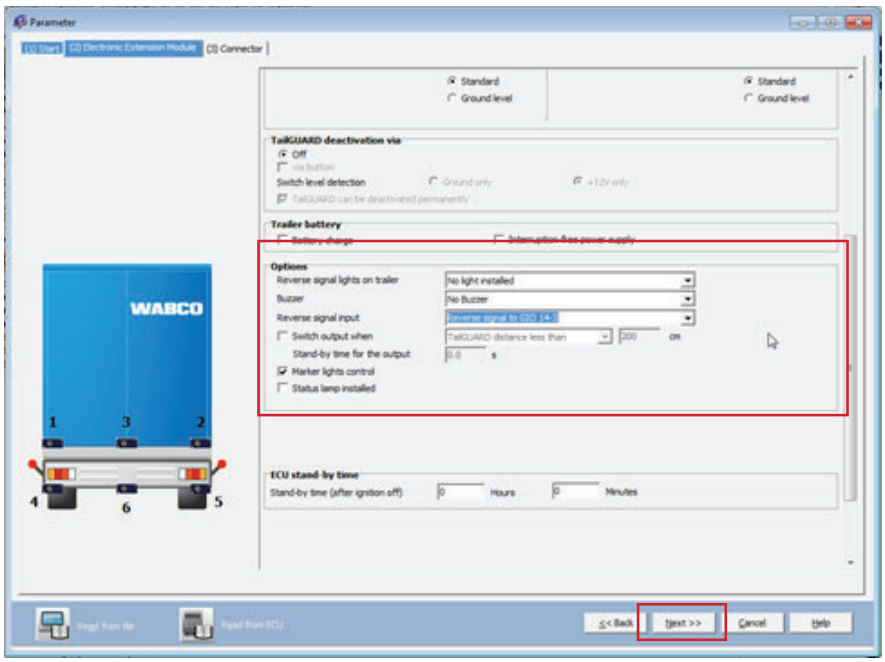

4017164a

Reverse signal lights

Select “No light installed” from drop box menu

Buzzer

The option “No buzzer” must be selected from drop box. If the optional buzzer is installed with the reverse signal box, it will be functional without any parametrization at the software.

- Reverse signal Input
- Select the option “Reverse signal on GIO 14-3”

This is an input for the reverse signal. Here, the reverse signal will be read in via the GIO 14 analog input from the reverse signal box.

Marker lights control

If external markers lights are installed, this box need to be checked.

After you input all the settings, select Next. Figure 28.

Fig. 28

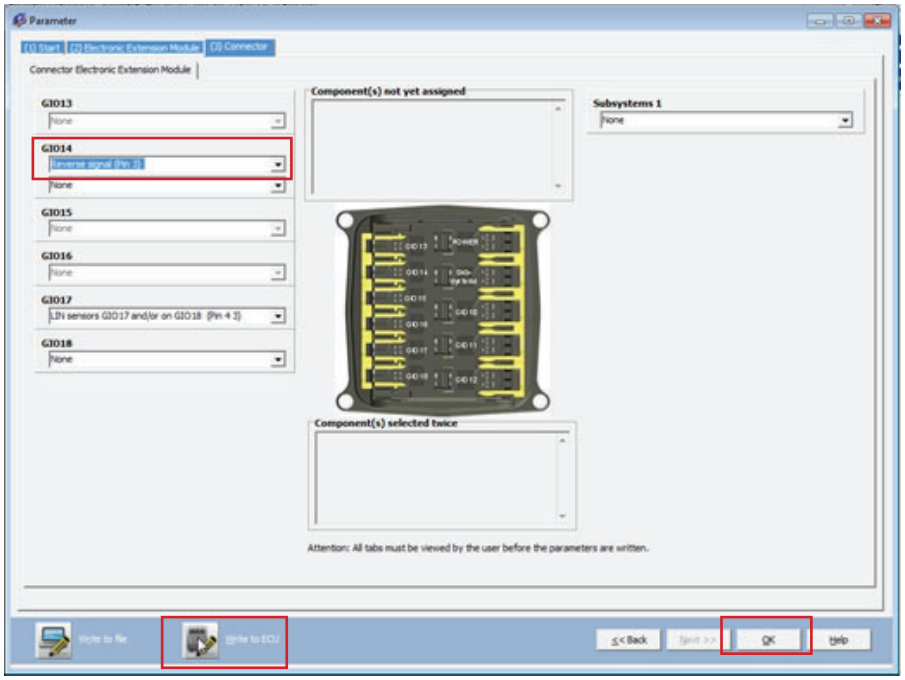

4017165a

1. Check if the reverse signal is defined at GIO14, and no error messages appear.
2. Select “Write to ECU”, and then select “OK”.

7.5.3.3 Start-up of the Ultrasonic Sensors

Requirements: For start-up of the ultrasonic sensors and TailGUARD system, the “monitoring area” must be identified using the following tests.

7.5.3.4 Normal EOL Test

Initialization of the ultrasonic sensors is carried out in three steps as part of the end-of-line test:

1. Teaching the ultrasonic sensors
2. Reflection test

3. Test body detection

1. Teaching the ultrasonic sensors

The ultrasonic sensors must “learn” to detect the position on the trailer after installing.

- Click on button Start initial start-up as shown on Figure 29.
- Cover the ultrasonic sensors completely and without touching them for 1-2 seconds. To accomplish the “learning” process, the following sequence must be observed:
- Main level: 1-left 2-right 3-middle
- Additional level: 4-left 5-right 6-middle
  - The ultrasonic sensor to be covered flashes on TOOLBOX PLUS™.
  - If an ultrasonic sensor has been detected, the external marker lights of the trailer flash and the next ultrasonic sensor that has to be learned flashes in the image (>window TailGUARD).

Fig. 29

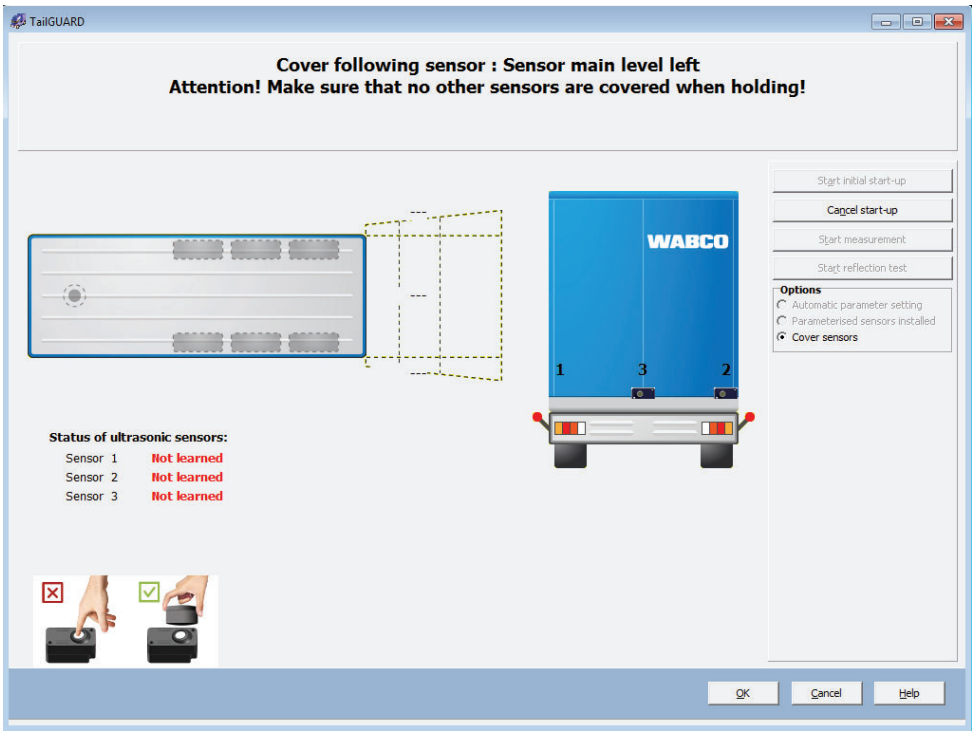

4016994a

2. Reflection test

After the ultrasonic sensors are learned, a test is performed to find whether reflections occur and the ultrasonic sensors incorrectly detect objects on the trailer as hindrances.

- For this test, an area of 8.5 ft (2.5 m) behind the trailer and 1.6 ft (0.5 m) to the side of the trailer must be kept clear.
- If an object is detected, press the Mask reflections button to mask this reflection out.
- Another measurement is then made to determine whether reflections of other objects have to be masked.
- If objects are still detected, ultrasonic sensors or attachment parts must be positioned differently.
  - Another measurement is then made to determine whether reflections of other objects have to be masked.

- If objects are still detected, LIN ultrasonic sensors or attachment parts must be positioned differently.

Fig. 30

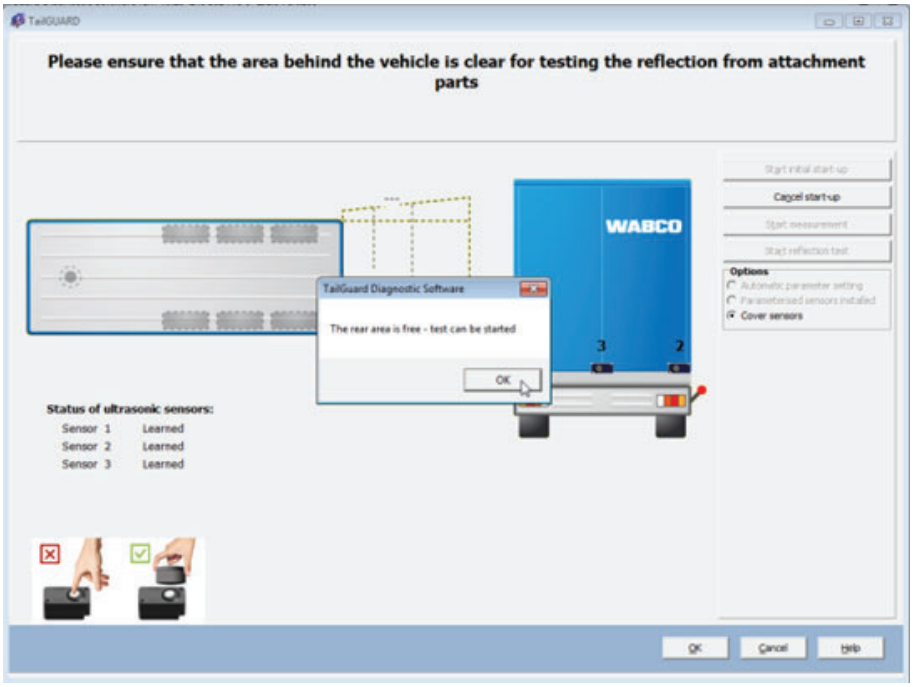

4017166a

Fig. 31

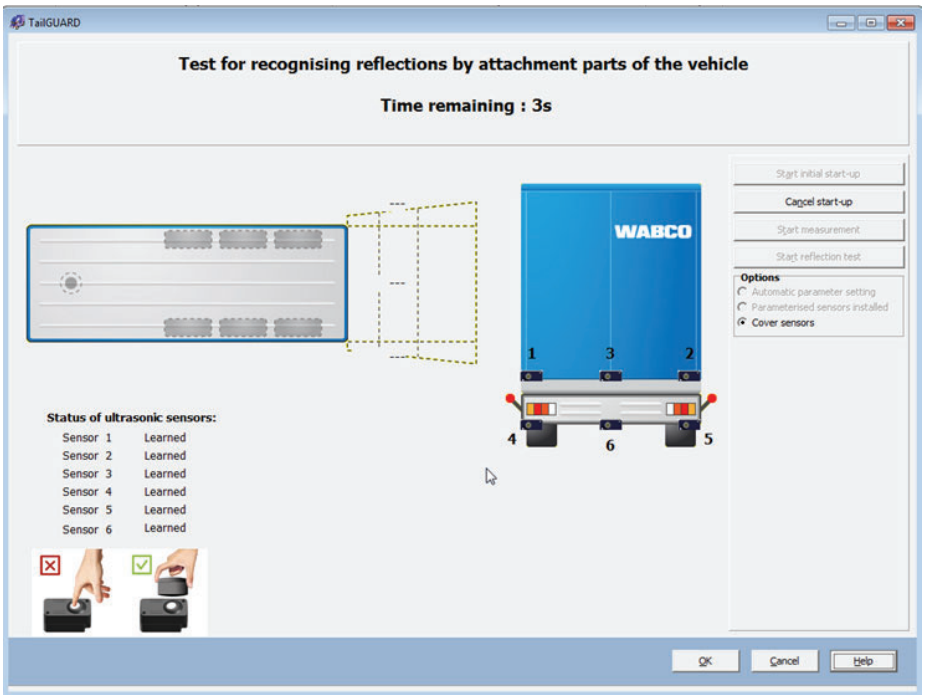

4017167a

3.Test body detection

If the system is fault-free, an object test is performed.

- This requires a test specimen, e.g. a plastic pipe, which is higher than the installation height of the ultrasonic sensors, at 2 ft left (0.6 ± 0.1 m) and 5.2 ft right (1.6 m ± 0.2 m) in the area behind the trailer.
  - The detected distance is shown in the TOOLBOX PLUS™ (Figures 32 and 33).
- Confirm the position of the objects with the Object detected button.
  - If the test specimen is detected properly, the End-of-Line bit in the electronic extension module is deleted and the system is fault-free. The start-up was successful.
  - If the test was not successful, either the ultrasonic sensors are being learned in the wrong position or the parameters for the sensor distance have been entered improperly.
- Check the parameters or the installation position of the LIN ultrasonic sensors and repeat the test.

Fig. 32

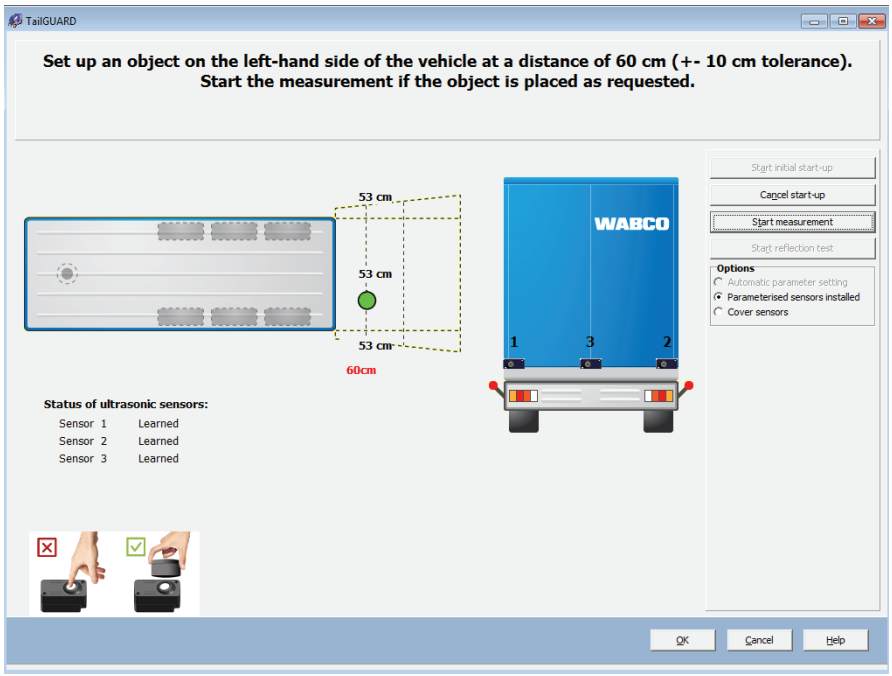

4016995a

Fig. 33

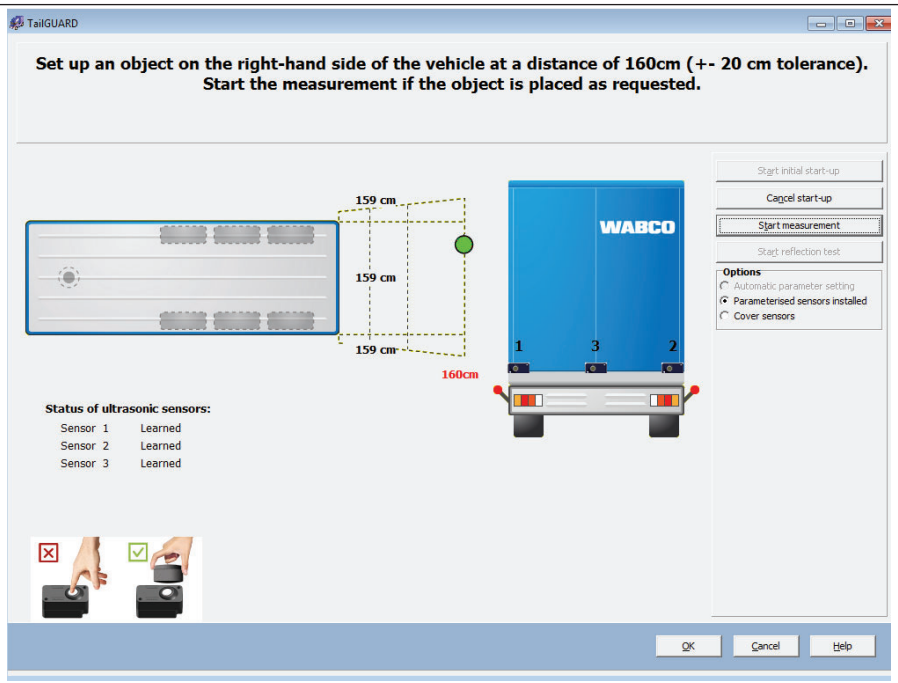

4016996a

7.5.3.5 Check the external marker lights

Next window will show to check the function of external marker lights (position lights). Figure 34.

Fig. 34

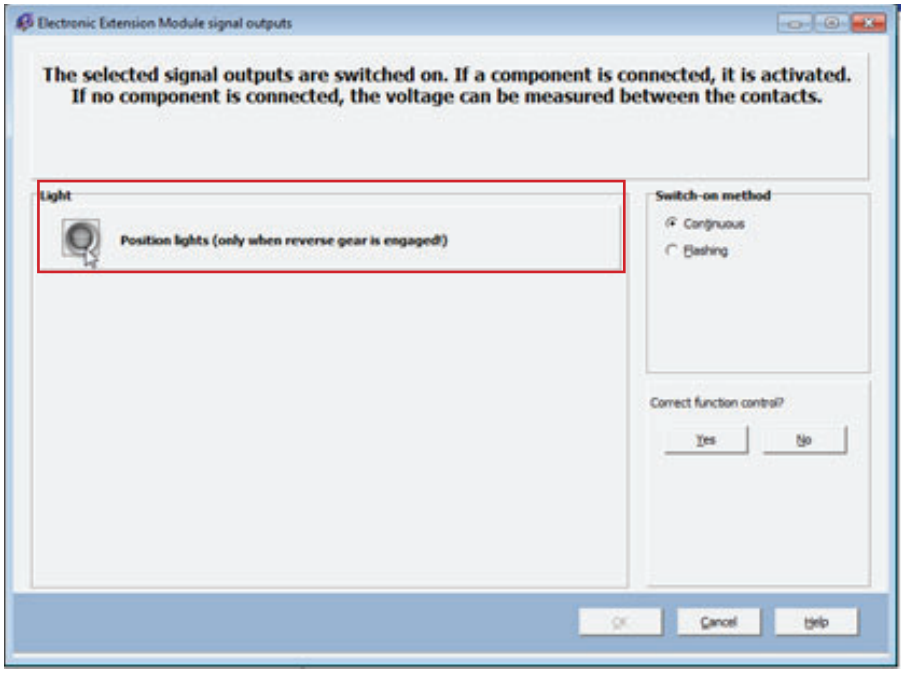

4017168a

1. Click on the position lights icon, and look in the trailer, if the lights are activated.
2. If the lights are working, click on ‘Yes’ at the box “Correct function control?”, as shown in Figure 35.

Fig. 35

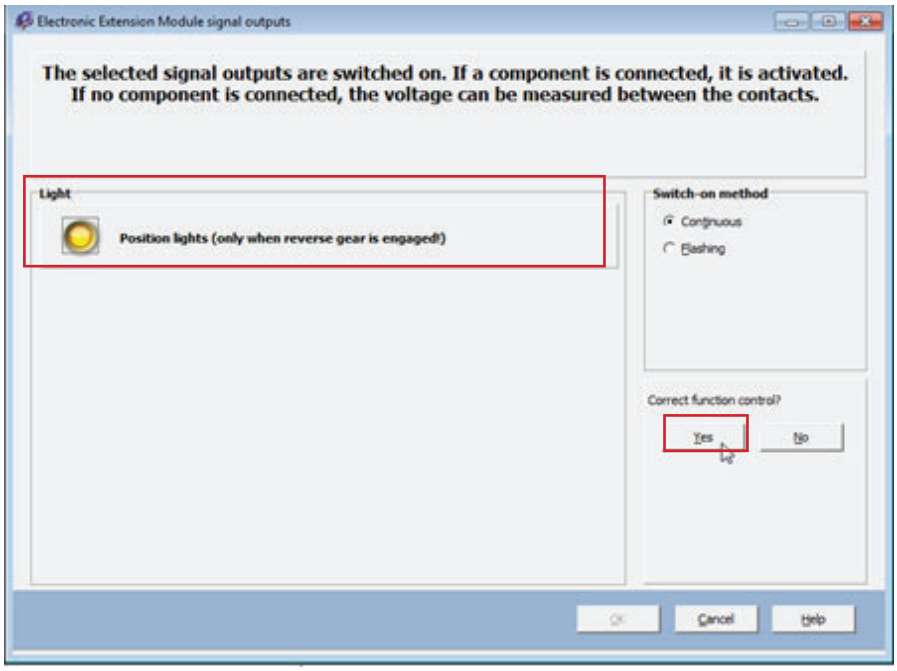

4017169a

Next screen will show up showing all tests were concluded and the system is ready for use. Figure 36.

Fig. 36

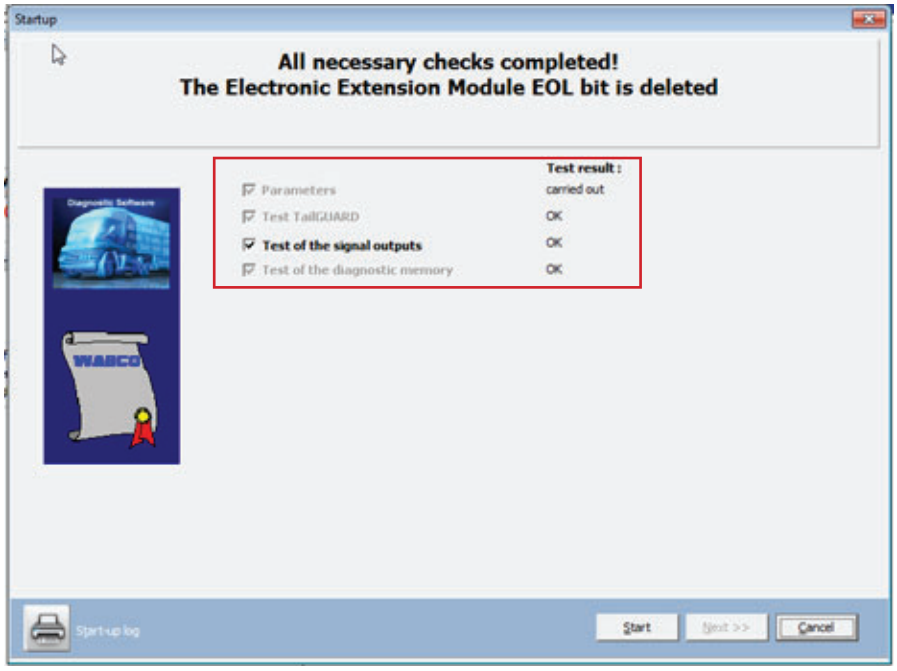

4017170a

8 Workshop Notes

8.1 Maintenance Information

Extreme weather conditions e.g. heavy rain or snowfall, can lead to restricted functionality. In the case of system fault messages or an assumed malfunction, the ultrasonic sensors must be checked for soiling first and cleaned as required.

In the case of a TailGUARD fault message or failure of the indication for operational readiness to appear after longer periods of being stationary with the ignition turned on, the trailer must be driven ahead a short distance until TailGUARD detects the speed signal. The next time trailer moves backwards, TailGUARD is ready for operation again.

A system diagnosis must be carried out as the next step. Apart from reading out the diagnostic memory, this function can also be used to activate individual TailGUARD components directly to test their function.

8.2 Diagnosis

Carry out a system diagnosis if you notice anything conspicuous or warning lamps/indicators are lit.

Currently present as well as sporadically occurring faults are stored in the diagnostic memory and can be displayed by means of the TOOLBOX PLUS™ Software. Repair instructions are provided in the diagnostic software.

After faults have been eliminated, the diagnostic memory should always be cleared.

8.3 Repair and Replacement

Defective cables and devices must be replaced with original WABCO products of identical part number.

If ultrasonic sensors or the control unit are replaced, a start-up procedure via system diagnosis must be carried out again.

When replacing the electronic control unit, the existing parameter set should be extracted, if possible, and copied to the new control unit.

The cover needs to be removed to replace the electronic control units.

- Use a screwdriver with a minimum length of 11 cm to release the catch on the housing to remove the cover. Figure 37.

Fig. 37

Disposal/Recycling

- Do not dispose of electronic devices, batteries or accumulators together with household refuse. These must instead be handed over to a designated collection point.
- Observe the national and regional regulations.
- Defective WABCO brake units can be returned to WABCO to guarantee the best possible processing.
- Simply contact your WABCO partner if you have any questions.

Fig. 38

9 Appendix I

9.1 Pin Assignment “Electronic Extension Module”

Connections	Pin	Electronic Extension Module
POWER, 8-pin		
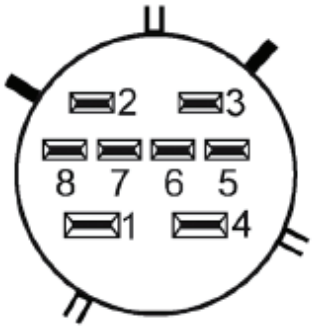	1	Power in
	2	CAN High 5V
	3	CAN Low 5V
	4	Ground
	5	-
	6	-
	7	-
	8	-
SUBSYSTEM, 8-pin		
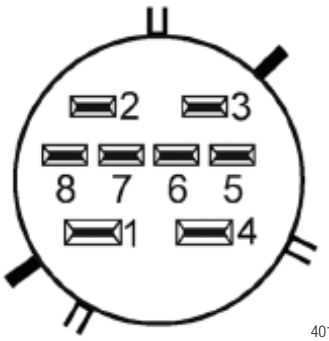	1	Power out
	2	CAN High 5V
	3	CAN Low 5V
	4	Ground
	5	-
	6	-
	7	-
	8	-

Connections	Pin	Electronic Extension Module
GIO12, 8-pin		
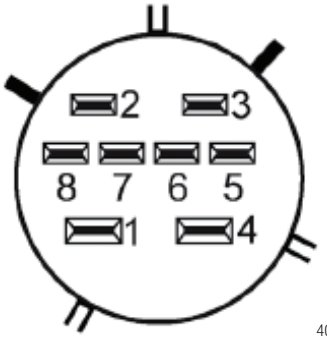	1	Reverse light in
	2	-
	3	-
	4	Ground
	5	Position lamp left in
	6	Position lamp left out
	7	Position lamp right out
	8	Position lamp right in
GIO14, 4-pin		
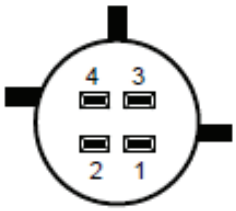	1	Voltage out (external buzzer)
	2	Ground
	3	Analog input from reverse signal box
	4	-
GIO17, 4-pin		
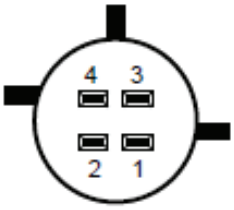	1	-
	2	LIN ground
	3	LIN ultrasonic sensor
	4	LIN supply voltage

10 Appendix II

The following tables provide kit part numbers for all TailGUARD configurations.

TailGUARDlight - 400 612 035 0	Part Number	Quantity
ELEX	446 122 071 0	1
ELEX – power cable	449 303 020 0	1
Ultrasonic sensors	446 122 450 0	2
ELEX – sensor cable	449 806 060 0	1
Sensor distribution cable	894 600 024 0	1
Reverse signal box	446 122 200 0	1
Diagnostic cable	449 609 060 0	1
External marker lights cable	449 908 060 0	1
Junction box	446 122 633 0	1

TailGUARD - 400 612 036 0	Part Number	Quantity
ELEX	446 122 071 0	1
ELEX – power cable	449 303 020 0	1
Ultrasonic sensors	446 122 450 0	3
ELEX – sensor cable	449 806 060 0	1
Sensor distribution cable	894 600 024 0	2
Reverse signal box	446 122 200 0	1
Diagnostic cable	449 609 060 0	1
External marker lights cable	449 908 060 0	1
Junction box	446 122 633 0	1

TailGUARDRoof - 400 612 037 0	Part Number	Quantity
ELEX	446 122 071 0	1
ELEX – power cable	449 303 020 0	1
Ultrasonic sensors	446 122 450 0	5
ELEX – sensor cable	449 806 060 0	1
Sensor distribution cable	894 600 024 0	4
Reverse signal box	446 122 200 0	1
Sensor extension cable	449 747 060 0	2
Diagnostic cable	449 609 060 0	1
External marker lights cable	449 908 060 0	1
Junction box	446 122 633 0	1

TailGUARDMAX - 400 612 038 0	Part Number	Quantity
ELEX	446 122 071 0	1
ELEX – power cable	449 303 020 0	1
Ultrasonic sensors	446 122 450 0	6
ELEX – sensor cable	449 806 060 0	1
Sensor distribution cable	894 600 024 0	5
Reverse signal box	446 122 200 0	1
Diagnostic cable	449 609 060 0	1
External marker lights cable	449 908 060 0	1
Junction box	446 122 633 0	1

11 Appendix III

Fig. 39

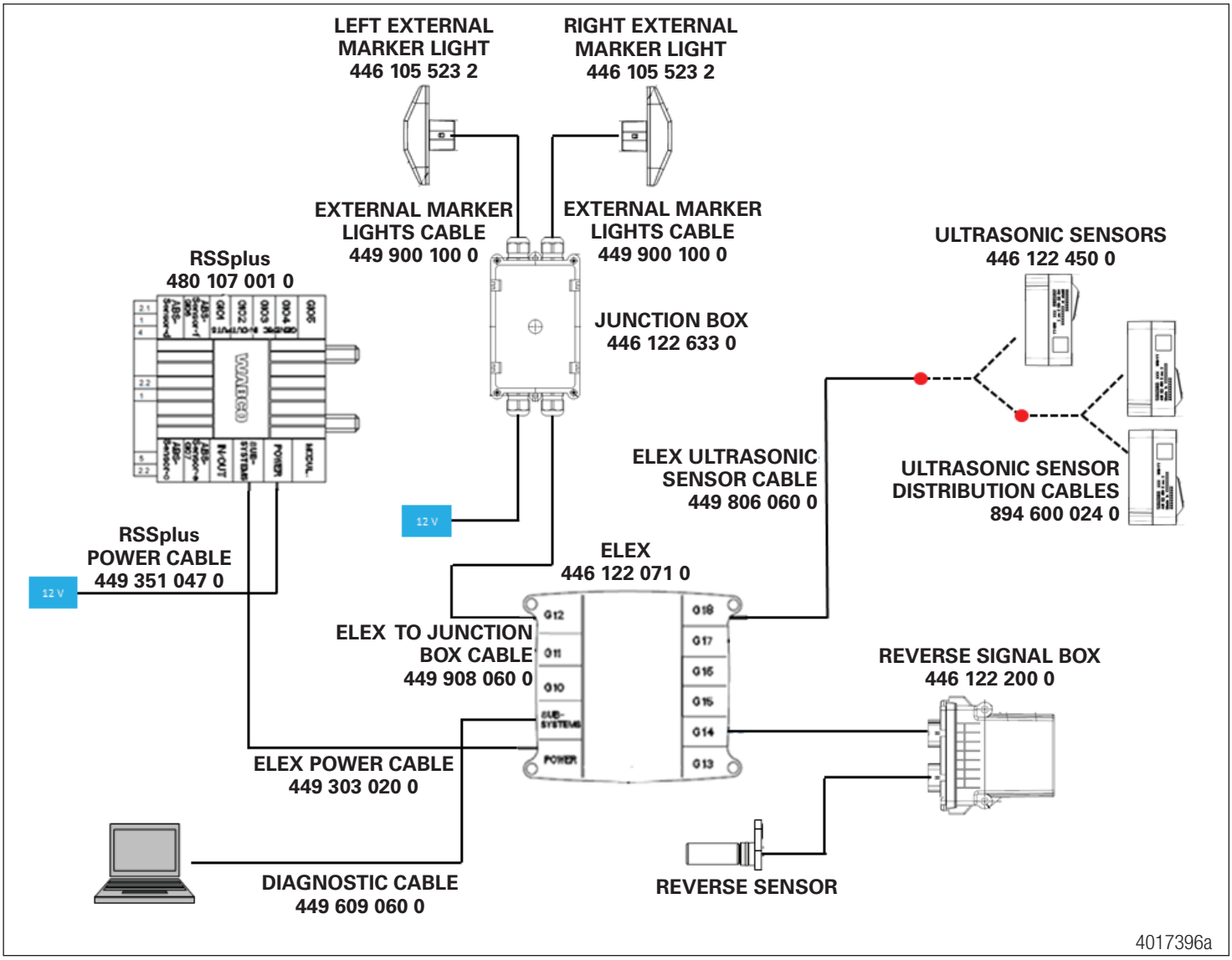

For further details contact the WABCO Customer Care Center at 855-228-3203.

About ZF Friedrichshafen AG

ZF is a global technology company and supplies systems for passenger cars, commercial vehicles and industrial technology, enabling the next generation of mobility. ZF allows vehicles to see, think and act. In the four technology domains Vehicle Motion Control, Integrated Safety, Automated Driving, and Electric Mobility, ZF offers comprehensive solutions for established vehicle manufacturers and newly emerging transport and mobility service providers. ZF electrifies different kinds of vehicles. With its products, the company contributes to reducing emissions and protecting the climate.

ZF, which acquired WABCO Holdings Inc. on May 29, 2020, now has 162,000 employees worldwide with approximately 260 locations in 41 countries. In 2019, the two then-independent companies achieved sales of €36.5 billion (ZF) and $3.4 billion (WABCO).

WABCO
Mobilizing Vehicle Intelligence