Pinning

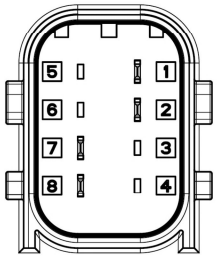

K30 + 24V
K31 GND

CAN LOW
CAN HIGH

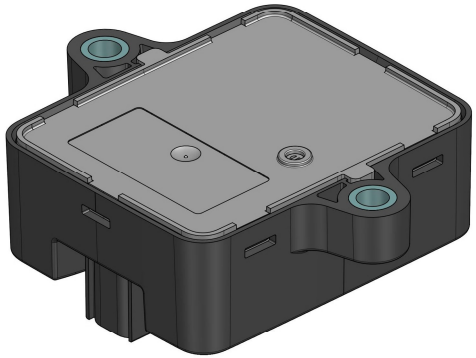

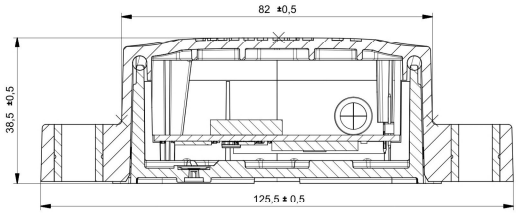

SECTION C-C

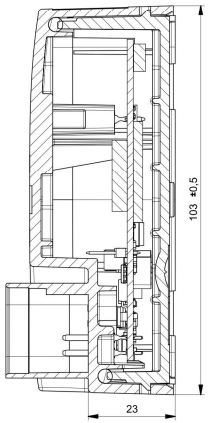

SECTION B-B

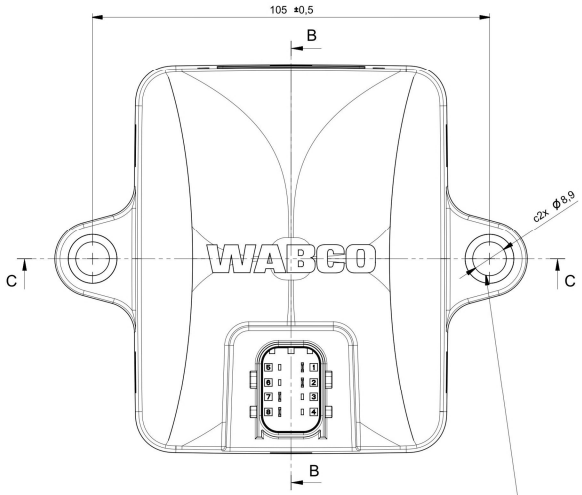

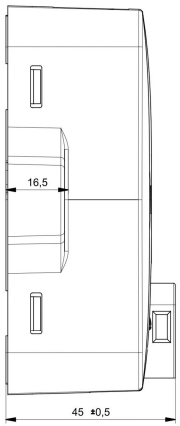

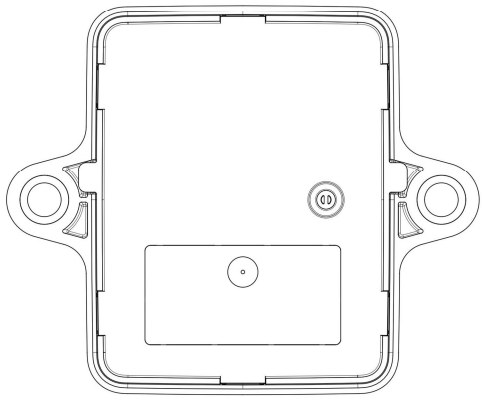

Tightening torque Max. 25,4Nm dry for M8x1,25 class 8.8 ISO898 bolt

Operating temperature:	-40°C to +75°C
Storage temperature:	-40°C to +75°C
Voltage range:	10-32V
Current range:	Maximum current 1,5A
Type of protection acc. To:	ISO20653 IP6K6K, IP6K9K complete device with mounted connector
EEC approval mark:	Approval number 05 1099 according to E/ECE/324 addendum 9: regulation no.10-05
Weight (without cable):	245g
Installation and mounting guidelines:	Following the instructions in latest version of the installation guide

version	rev.nr.	changes	place	date	name
1	3	Approver added		06/05/2022	kd
1	2	Dimensions / annotations changed		07/10/2021	kd
1	1	Approved version		07/06/2019	kd
1	0	Approved version		26/02/2019	kd

Linear tolerance (mm)	over	0	1	3	6	10	15	22	30	40
	to	1	3	6	10	15	22	30	40	53
Non-Tool-Rated Dimensions		±0,18	±0,19	±0,20	±0,21	±0,23	±0,25	±0,27	±0,30	±0,34
Tool-Rated Dimensions		±0,08	±0,09	±0,10	±0,11	±0,13	±0,15	±0,17	±0,20	±0,24

material

	date	name
drawn	26/02/2019	Deleersnyder Kurt
appr.	06/05/2022	Gheeraert Vincent

projection | scale 1/1 | format A2

Tolerance for measurements / form and location tolerances without tolerance: DIN 16901-130

Project-nr: 1800032

Client: 000445

WABCO

Drawing name: TX-TRAILERPULSE / TrailerCAST 346 291 000 0

Drawing nr. A_7782

assembly drawing:

dir.